Brawley City Council &
Successor Agency to
Brawley Community Redevelopment Agency
Agenda
Regular Meeting
Tuesday, April 2, 2013 @ 6:00 PM
City Council Chambers
383 Main Street
Brawley, California 92227

Sam A. Couchman, Mayor
Miguel C. Miranda, Mayor Pro-Tempore
Don C. Campbell, Council Member
George A. Nava, Council Member
Donald L. Wharton, Council Member

Alma Benavides, City Clerk
Jim Hamilton, City Treasurer
Dennis H. Morita, City Attorney
Rosanna Bayon Moore, City Manager/ Executive Director

CALL TO ORDER

ROLL CALL

INVOCATION

PLEDGE OF ALLEGIANCE

1. **APPROVAL OF AGENDA**

2. **PUBLIC APPEARANCES/COMMENTS** (Not to exceed 4 minutes) *this is the* time for the public to address the Council **on any item not appearing on the *agenda*** *that is within the subject matter jurisdiction of the City Council. The Mayor will recognize you and when you come to the microphone, please state your name for the record. You are not allowed to make personal attacks on individuals or make comments which are slanderous or which may invade an individual's personal privacy. Please* ***direct your questions and comments to the City Council.***

3. **CONSENT AGENDA** Items are approved by one motion. Council Members or members of the public may request consent items be considered separately at a time determined by the Mayor.

   a. Approve Minutes: March 18, 2013 ***pg 4***

   b. Approve Accounts Payable: March 22, 2013 ***pp 5-18***

   c. Adopt Resolution No. 2013- : Resolution Authorizing Investment of City Monies in Local Agency Investment Fund (LAIF) ***pp 19-22***

   d. Approve Expenditure in the Amount of $17,961.19 to Total Technologies Solutions for Emergency Operations Center (EOC) Network Wiring Installation ***pp 23-27***

   e. Approve Purchase in the Amount of $315,925.01 for a Dump Truck, Tractor Loader & Telehandler, Using the National Joint Powers Alliance Purchasing Contract #77-377 ***pp 28-51***

4. **REGULAR BUSINESS**

   a. Approve Oberon Fuels' Request to Expand the Imperial Valley Enterprise Zone (IVEZ) to Include 7.12 Acres Project Area (APN037-070-013) & Adopt Resolution 2013- : Resolution Approving the Expansion of the Imperial Valley Enterprise Zone Boundaries. ***pp 52-57***

   b. Update Regarding Brawley Community Foundation's 1st Annual "Taking Back Main Street" Event, April 27, 2013 & Request to Sell & Consume Alcohol on a City Street ***pg 58***

5. **DEPARTMENTAL REPORTS**

   a. Monthly Staffing Report by Shirley Bonillas, Personnel & Risk Management Administrator ***pg 59***

   b. Update re: Several City Projects by Yazmin Arellano, Public Works Director

7. **CITY COUNCIL REPORTS**

8. **TREASURER'S REPORT**

9. **CITY MANAGER'S REPORT**

10. **CITY ATTORNEY'S REPORT**

11. CLOSED SESSION

PENDING LITIGATION

a. Upon advice of its legal counsel, the Agency will recess to closed session pursuant to G.C. 54956(a) to confer with its attorney regarding pending litigation which has been initiated formally and to which the Agency is a party. The title of the litigation is: Administrative Civil Liability Complaint R7-2013-0028 City of Brawley Wastewater Treatment Plant

ADJOURNMENT

Adjourn to Tuesday, April 9, 2013 @ 5:30 PM, **Brawley Del Rio Branch Library**,1501 I Street, Brawley, California

Next Regular Meeting, *Tuesday, April 16, 2013 @ 6:00 PM*, City Council Chambers,383 Main Street, Brawley, California. Supporting Documents are available for public review in the Office of the City Clerk, 383 Main Street, Brawley, California 92227 - Monday through Friday during Regular Business Hours; Individuals who require special accommodations are requested to give 48 hours prior notice. Contact: Office of the City Clerk @ 760-351-3080

Janet P. Smith, Deputy City Clerk

CITY OF BRAWLEY
March 18, 2013

The City Council of the City of Brawley, California met in special meeting at 5:30 PM, Council Chambers, 383 Main Street, Brawley, California, the date, time and place duly established for the holding of said meeting. The City Clerk attests to the posting of the agenda pursuant to G.C. §54954.2.

The meeting was called to order by Mayor Couchman @ 5:30 PM

PRESENT: Campbell, Couchman, Nava, Wharton
ABSENT: Miranda

The invocation was offered by Council Member Campbell.

The pledge of allegiance was led by Mayor Couchman.

APPROVAL OF AGENDA

The agenda was ***approved as submitted***. m/s/c Campbell/Nava 4-0

PUBLIC APPEARANCES

There were no public appearances

REGULAR BUSINESS

a. Strategic Planning-presented by Rosanna Bayon Moore, City Manager

The following top 5 priorities were established for FY 2013-2014:

1. Financial stability
2. Decent streets
3. Leader in downtown business revival
4. Reliable water, sewer and stormwater infrastructure
5. Cleanest and most attractive city

ADJOURNMENT – Next regular meeting, Tuesday, March 19, 2013, 6:00 PM, City Council Chambers, 383 Main Street, Brawley, California.

Lorena Savala, Deputy City Clerk

Check Register Report

Date: 03/22/2013
Time: 9:11 AM
Page: 1

City of Brawley

Check Number	Check Date	Status	Vendor Number	Vendor Name	Check Description	Amount
23624	03/22/2013	Printed	A368	AFLAC INC.	Cancer, ICU, Disability	3,107.91
23625	03/22/2013	Printed	B202	BRAWLEY FIREFIGHTERS LOCAL #19	March Union Dues	360.00
23626	03/22/2013	Printed	B208	BRAWLEY POLICE SERGEANT'S ASSO	March Union Dues	250.00
23627	03/22/2013	Printed	B213	BRAWLEY PUBLIC SAFETY EMPLOYEE	March Union Dues	1,961.00
23628	03/22/2013	Void			Void Check	0.00
23629	03/22/2013	Printed	C889	CALIFORNIA STATE DISBURSEME	Deductions	3,685.78
23630	03/22/2013	Printed	C110	COLUMBUS BANK & TRUST COMPA	Unreimbursed Medical Deduction	378.84
23631	03/22/2013	Printed	C084	CONTINENTAL AMERICAN INS.	Critical Care Withheld	594.99
23632	03/22/2013	Printed	C240	COURT SERVICES (CIVIL)	Deductions	75.00
23633	03/22/2013	Printed	F689	FRANCHISE TAX BOARD	Deductions	425.00
23634	03/22/2013	Printed	G008	MARTHA T GARCIA	Refund Cancer Policy OvPymt	25.77
23635	03/22/2013	Printed	H732	ANGELICA F HARSANY	Deductions	932.30
23636	03/22/2013	Printed	N944	NATIONAL PLAN COORDINATORS	Deferred Comp #340233-01	6,589.35
23637	03/22/2013	Printed	N187	NATIONWIDE RETIREMENT SOLUTION	Deferred Compensation #05270	785.81
23638	03/22/2013	Printed	R328	JUSTIN RILEY	Refund Critical Care Overpaymt	46.36
23639	03/22/2013	Printed	S325	SUN COMMUNITY FED. CREDIT UNIO	Credit Union Deductions	1,821.00
23640	03/22/2013	Printed	T542	TEAMSTERS LOCAL #542	March Union Dues	1,301.00
23641	03/22/2013	Printed	U110	UNITED WAY OF IMPERIAL COUN	United Way Deductions	33.00

18 **Checks Total (excluding void checks):** **22,373.11**

Check Number	Check Date	Status	Vendor Number	Vendor Name	Check Description	Amount
23564	03/21/2013	Void			Void Check	0.00
23565	03/21/2013	Void			Void Check	0.00
23566	03/21/2013	Void			Void Check	0.00
23567	03/21/2013	Printed	I301	IMPERIAL HARDWARE CO., INC.	Car Wash/Wax, Trimmer Line	1,869.90
23568	03/21/2013	Printed	I103	IMPERIAL IRRIGATION DISTRIC	Power Bills 2/4/13-3/5/13	36,719.36
23569	03/21/2013	Printed	I608	IMPERIAL TRUSS & LUMBER CO	Nail Gun	205.46
23570	03/21/2013	Printed	I432	IMPERIAL VALLEY COLLEGE	Work Study Students Jan 2013	462.75
23571	03/21/2013	Printed	I133	IMPERIAL VALLEY CYCLE CENTER I	Tires #50 Water Plant	295.58
23572	03/21/2013	Printed	J632	JORDAN IMPLEMENT, INC.	Struts #50 WTP	326.01
23573	03/21/2013	Printed	K731	KEARNY PEARSON FORD, LLC.	Rail O-Rings #915 P.D.	270.75
23574	03/21/2013	Printed	L920	LABRUCHERIE IRRIGATION SUPP	Station Controller	346.30
23575	03/21/2013	Printed	L207	LASALLE JANITORIAL SERVICES	Cleaning Services	355.00
23576	03/21/2013	Printed	L599	LEE & RO. INC.	WWTP Improvements Project	10,266.51
23577	03/21/2013	Printed	L603	LIEBERT CASSIDY WHITMORE	Affordable Care Act Webinar	55.00
23578	03/21/2013	Printed	L425	THE LIGHTHOUSE, INC.	Trailer Socket #99T Parks	63.27
23579	03/21/2013	Printed	M351	SUSAN MANGER	Reimburse For Books	106.92
23580	03/21/2013	Printed	M714	MANPOWER	Temp Services Thru 3/10/13	597.20
23581	03/21/2013	Printed	G936	MANSFIELD GAS EQUIPMENT	Replace Pump Module #16 Sts	10,785.52
23582	03/21/2013	Printed	M004	MCNEECE BROS OIL COMPANY	Fuel/Public Works	11,737.39
23583	03/21/2013	Printed	M315	MOSS, LEVY & HARTZHEIM	Year End Accounting Work	10,455.00
23584	03/21/2013	Printed	M732	JERRY MUDRA	Refund Dep/OvPymt 447 WMAG	200.60
23585	03/21/2013	Printed	N045	NORTHEND AUTOPARTS, INC.	D Earth	477.43
23586	03/21/2013	Printed	0567	JIM O'MALLEY PLUMBING	Nozzles, Tape	42.80
23587	03/21/2013	Printed	O286	ALMA OCANO	Refund Bus Lic Dep/OvPymt	8.93
23588	03/21/2013	Printed	O333	OCT WATER QUALITY ACADEMY	WW Review/G. Rodrgiguez	575.00
23589	03/21/2013	Printed	O421	ONE SOURCE DISTRIBUTORS, IN	Starter	539.72
23590	03/21/2013	Printed	O901	ORANGE COMMERCIAL CREDIT	Aluminum Analysis	7,438.00
23591	03/21/2013	Printed	P110	PESTMASTER SERVICES	Rodent Control Services	285.00
23592	03/21/2013	Printed	P442	PHOENIX UNIFORMS, INC.	Shoulder Patches	307.80
23593	03/21/2013	Printed	P254	PITNEY BOWES INC.	Postage Meter Lease1/3-3/31/13	187.23
23594	03/21/2013	Printed	P257	PITNEY BOWES	Postage Machine Lease P.D.	356.40
23595	03/21/2013	Printed	P780	PRINCE & ASSOCIATES	Refund Dep/OvPymt 480 W C St	410.25
23596	03/21/2013	Printed	P558	PRO RECORD STORAGE, INC.	Documents Storage Feb 2013	206.90
23597	03/21/2013	Printed	P340	PROTECTION ONE ALARM	Alarm Monitoring 3/1-3/31/13	80.20
23598	03/21/2013	Printed	P342	PSOMAS & ASSOCIATES, INC.	Pedestrian & Bike Improvements	2,736.90
23599	03/21/2013	Printed	R651	R.J. SAFETY SUPPLY CO., INC	Fire Extenguishers	185.52
23600	03/21/2013	Printed	R006	ROSA I RAMIREZ	Reimb Travel/CalTrans Training	51.00
23601	03/21/2013	Printed	R462	REDDY ICE, CORPORATION	Ice	140.05
23602	03/21/2013	Printed	R646	OSCAR ROBLES	Refund Deposit 409 SEAS	82.43
23603	03/21/2013	Printed	R933	GUSTAVO RODRIGUEZ	Travel Adv/WWTP Review	1,836.49
23604	03/21/2013	Printed	S504	PEDRO SANCHEZ	Travel Adv/Fire Mechanics Acad	1,118.61
23605	03/21/2013	Printed	S359	SCLLN	2013 SCLLN Membership	150.00
23606	03/21/2013	Printed	T901	SHELL	Fuel #3903	50.00
23607	03/21/2013	Printed	S508	GUILLERMO SILLAS	Reimb Travel/Engineer Academy	13.20
23608	03/21/2013	Printed	S507	JENNIFER SINGH	Refund Deposit 980 Birch St	63.19
23609	03/21/2013	Printed	S888	LAURA SOBERANES	Refund OverPayment 1059 WALS	177.54
23610	03/21/2013	Printed	S495	SOUTHERN CALIFORNIA GAS CO.	187 525 6200 1	77.06
23611	03/21/2013	Printed	S760	SPECTRUM	Video Tape Council Mtg 2/5/13	400.00
23612	03/21/2013	Printed	S689	STAPLES ADVANTAGE	Pens, Markers, Staples, Files	143.84
23613	03/21/2013	Printed	S750	STAPLES, INC	Ink Cartridges,Correction Tape	425.97
23614	03/21/2013	Printed	S712	STIFF EQUIPMENT INC.	Angle Iron	451.97
23615	03/21/2013	Printed	T129	JEANETTE TORREZ	Refund Dep/OvPymt 1290 K St	211.75
23616	03/21/2013	Printed	U167	UNDERGROUND SERVICE ALERT, INC	Dig Alert Tickets Jan. 2012	84.00
23617	03/21/2013	Printed	V335	V & V MANUFACTURING INC.	Nameplates	46.66

Check Number	Check Date	Status	Vendor Number	Vendor Name	Check Description	Amount
23618	03/21/2013	Printed	V506	VALLEY PETROLEUM EQUIPMENT INC	Remove Underground Tank	9,900.00
23619	03/21/2013	Printed	V078	DAVID VARGAS	Refund Deposit 274 I Street	188.58
23620	03/21/2013	Printed	W931	RUBY DOREEN WALLA	Reimb For Refreshments	54.38
23621	03/21/2013	Printed	W833	WATER TECH	Rotor, Bushing	267.70
23622	03/21/2013	Printed	W135	WAXIE SANITARY SUPPLY	Paper Towels	103.84
23623	03/21/2013	Printed	W355	BERTHA ALICIA WHITE	Dance Instructor Feb 2013	186.15
			109		**Checks Total (excluding void checks):**	**299,040.89**

Fund / Department / Account	GL Number Abbrev	Vendor Name / Invoice Description	Check Number	Invoice Number	Due Date	Amount
Fund: General Fund						
Dept:						
101-000.000-201.560	Retention	ECKARD COMMERCIAL EOC Project #2012-16A	23549	4	02/28/2013	-3,649.05
101-000.000-205.303	Downtown M	DOWNTOWN MERCHANTS FUND Business Lic. Tax 7/1-12/31/12	23547		03/18/2013	605.53
101-000.000-205.307	Fee - SB 1	ALMA OCANO Refund Bus Lic Dep/OvPymt	23587		03/13/2013	0.91
101-000.000-205.440	Prkg tckt	IMPERIAL COUNTY AUDITOR County Portion-Parking Tickets	23561		03/18/2013	1,515.00
				Total		-1,527.61
Dept: General Revenues						
101-110.000-410.800	Business l	ALMA OCANO Refund Bus Lic Dep/OvPymt	23587		03/13/2013	7.29
101-110.000-410.910	Utility us	JERRY MUDRA Refund Dep/OvPymt 447 WMAG	23584		03/13/2013	1.32
101-110.000-410.910	Utility us	PRINCE & ASSOCIATES Refund Dep/OvPymt 480 W C St	23595		03/11/2013	2.64
101-110.000-410.910	Utility us	JEANETTE TORREZ Refund Dep/OvPymt 1290 K St	23615		03/11/2013	2.64
101-110.000-470.150	Penalty &	ALMA OCANO Refund Bus Lic Dep/OvPymt	23587		03/13/2013	0.73
				Total General Revenues		14.62
Dept: City Council						
101-111.000-730.200	Technical	BRAWLEY CHAMBER OF COMMERCE Good Morning Breakfast	23529		03/08/2013	75.00
101-111.000-730.200	Technical	SPECTRUM Video Tape Council Mtg 2/5/13	23611	11023	03/01/2013	400.00
				Total City Council		475.00
Dept: City Clerk						
101-112.000-730.200	Technical	BRAWLEY CHAMBER OF COMMERCE Good Morning Breakfast	23529		03/08/2013	15.00
101-112.000-730.200	Technical	PRO RECORD STORAGE, INC. Documents Storage Feb 2013	23596	0011975	03/01/2013	21.00
101-112.000-740.400	Rent	PRO RECORD STORAGE, INC. Documents Storage Feb 2013	23596	0011975	03/01/2013	101.90
101-112.000-750.300	Advertisin	ASSOCIATED DESERT NEWSPAPER SOQ Engineer Gereaux Pk	23520	10560039	02/14/2013	664.61
101-112.000-750.300	Advertisin	ASSOCIATED DESERT NEWSPAPER Ad/Fire Chief	23520	10556131	02/17/2013	809.52
101-112.000-750.300	Advertisin	ASSOCIATED DESERT NEWSPAPER Notice Of Public Hearing	23520	10566685	02/22/2013	137.15
101-112.000-750.300	Advertisin	ASSOCIATED DESERT NEWSPAPER Notice Of Public Hearing	23520	10568298	02/27/2013	664.46
				Total City Clerk		2,413.64
Dept: City Manager						
101-131.000-730.200	Technical	BRAWLEY CHAMBER OF COMMERCE Good Morning Breakfast	23529		03/08/2013	15.00
101-131.000-750.500	Training	I.V. ECONOMIC DEVELOPMENT CORP IV Renewable Energy Expo	23560		03/08/2013	400.00
				Total City Manager		415.00
Dept: Finance						
101-151.000-750.500	Training	ROSA I RAMIREZ Reimb Travel/CalTrans Training	23600		03/21/2013	51.00
				Total Finance		51.00
Dept: Personnel						
101-153.000-730.200	Technical	BRAWLEY CHAMBER OF COMMERCE Good Morning Breakfast	23529		03/08/2013	15.00
101-153.000-730.200	Technical	CAL-TEST Drug Prevention Fee Mar. 2013	23533	2013-08260	03/08/2013	39.95
101-153.000-730.200	Technical	PRO RECORD STORAGE, INC. Documents Storage Feb 2013	23596	0012050	03/01/2013	48.00
101-153.000-740.400	Rent	PRO RECORD STORAGE, INC. Documents Storage Feb 2013	23596	0012050	03/01/2013	36.00
101-153.000-750.500	Training	LIEBERT CASSIDY WHITMORE Affordable Care Act Webinar	23577		03/12/2013	55.00

Fund / Department / Account	GL Number / Abbrev	Vendor Name / Invoice Description	Check Number	Invoice Number	Due Date	Amount
Fund: General Fund						
Dept: Personnel						
				Total Personnel		193.95
Dept: Planning						
101-171.000-730.100	Profession	CASTANEDA & ASSOCIATES Sustainable Planning Grant	23537	1	03/01/2013	4,598.50
101-171.000-730.200	Technical	BRAWLEY CHAMBER OF COMMERCE Good Morning Breakfast	23529		03/08/2013	60.00
101-171.000-730.200	Technical	GORDON GASTE Reimb Recording Documents	23555		03/18/2013	24.00
101-171.000-740.400	Rent	CANON FINANCIAL SERVICES, INC Planning Copier Lease Mar 2013	23534	2027258	02/26/2013	372.94
				Total Planning		5,055.44
Dept: Non-departmental						
101-191.000-721.200	Other oper	IMPERIAL HARDWARE CO., INC. Anchors, Screws, Braces	23567	283110/2	09/05/2012	6.78
101-191.000-730.100	Profession	MOSS, LEVY & HARTZHEIM Year End Accounting Work	23583	4277	02/28/2013	10,455.00
101-191.000-730.200	Technical	PROTECTION ONE ALARM Alarm Monitoring 3/1-3/31/13	23597		03/05/2013	42.50
101-191.000-730.200	Technical	PESTMASTER SERVICES Rodent Control Services	23591	1340110	03/11/2013	85.00
101-191.000-730.200	Technical	PESTMASTER SERVICES Pest Control Services	23591	1340111	03/11/2013	35.00
101-191.000-730.200	Technical	PESTMASTER SERVICES Pest Control Services	23591	MT1340010	03/06/2013	30.00
101-191.000-740.100	Repair & m	CANON SOLUTIONS AMERICA, INC Copier Maint Feb./ Admin	23535	4008925334	03/01/2013	69.16
101-191.000-740.200	Cleaning s	ALSCO AMERICAN LINEN DIV. Cleaning Services	23519	LYUM709531	03/08/2013	12.70
101-191.000-740.400	Rent	PITNEY BOWES INC. Postage Meter Lease1/3-3/31/13	23593	890944	03/04/2013	187.23
101-191.000-800.200	Buildings	ECKARD COMMERCIAL EOC Project #2012-16A	23549	4	02/28/2013	72,981.00
				Total Non-departmental		83,904.37
Dept: Police Protection						
101-211.000-720.100	Office sup	STAPLES ADVANTAGE CD Sleeves	23612	3194819591	03/09/2013	10.78
101-211.000-720.100	Office sup	STAPLES ADVANTAGE Pens, Markers, Staples, Files	23612	3194819592	03/09/2013	133.06
101-211.000-721.100	Uniforms	PHOENIX UNIFORMS, INC. Shoulder Patches	23592	622164	03/01/2013	307.80
101-211.000-721.100	Uniforms	V & V MANUFACTURING INC. Nameplates	23617	37424	03/14/2013	27.33
101-211.000-721.100	Uniforms	V & V MANUFACTURING INC. Nameplates	23617	37425	03/14/2013	19.33
101-211.000-721.200	Other oper	IMPERIAL HARDWARE CO., INC. Car Wash/Wax, Trimmer Line	23567	305693/2	03/13/2013	10.37
101-211.000-725.300	Natural ga	SOUTHERN CALIFORNIA GAS CO. 187 525 6200 1	23610		03/04/2013	77.06
101-211.000-725.400	Fuel	MCNEECE BROS OIL COMPANY Fuel/Graffiti/P.D.	23582	804873	02/28/2013	6,752.77
101-211.000-730.200	Technical	BRAWLEY CHAMBER OF COMMERCE Good Morning Breakfast	23529		03/08/2013	15.00
101-211.000-730.200	Technical	DEPARTMENT OF JUSTICE Fingerprint Applications	23545	958573	03/05/2013	66.00
101-211.000-730.200	Technical	DEPARTMENT OF JUSTICE Evidentiary Drug Analysis	23545	961616	03/06/2013	68.00
101-211.000-730.200	Technical	EL CENTRO ANIMAL CLINIC, IN Vet Services P.D.	23550		03/11/2013	127.49
101-211.000-730.200	Technical	EL CENTRO ANIMAL CLINIC, IN K-9 Boarding Services 12/25/12	23550		12/25/2012	58.50
101-211.000-740.100	Repair & m	AIRWAVE COMMUNICATIONS ENT INC Monthly Maint. Radio Cont/PD	23517	604027	11/30/2012	608.00
101-211.000-740.100	Repair & m	AIRWAVE COMMUNICATIONS ENT INC Monthly Maint. Radio Cont/PD	23517	604102	02/28/2013	608.00
101-211.000-740.100	Repair & m	AIRWAVE COMMUNICATIONS ENT INC Radio Repair	23517	425493	02/15/2013	150.00

Fund / Department / Account	GL Number Abbrev	Vendor Name / Invoice Description	Check Number	Invoice Number	Due Date	Amount
Fund: General Fund						
Dept: Police Protection						
101-211.000-740.100	Repair & m	AIRWAVE COMMUNICATIONS ENT INC Radio Repair	23517	425494	02/15/2013	150.00
101-211.000-740.400	Rent	PITNEY BOWES Postage Machine Lease P.D.	23594	7060619-MR13	03/13/2013	356.40
101-211.000-750.200	Communicat	AT&T-CALNET 2 Telephone Services 2/3-3/2	23521		03/03/2013	16.12
101-211.000-750.210	Postage	FEDERAL EXPRESS CORP. Mailings - P.D.	23551	2-201-08868	03/08/2013	129.59
101-211.000-750.510	Training/P	JONATHAN BLACKSTONE Travel Adv/SLI	23527		03/20/2013	462.18
				Total Police Protection		10,153.78
Dept: Graffiti Abatement						
101-211.300-725.400	Fuel	MCNEECE BROS OIL COMPANY Fuel/Graffiti/P.D.	23582	804873	02/28/2013	173.81
				Total Graffiti Abatement		173.81
Dept: Fire Department						
101-221.000-720.600	Plumbing s	IMPERIAL HARDWARE CO., INC. Batteries, Nipples, Tape	23567	304454/2	03/03/2013	4.63
101-221.000-720.600	Plumbing s	IMPERIAL HARDWARE CO., INC. Return Nipple	23567	304504/2	03/04/2013	-3.73
101-221.000-721.200	Other oper	IMPERIAL HARDWARE CO., INC. Batteries, Nipples, Tape	23567	304454/2	03/03/2013	8.50
101-221.000-721.900	Small tool	AIRWAVE COMMUNICATIONS ENT INC Bogen Amplifer Horn/Ceiling	23517	425589	02/11/2013	1,278.19
101-221.000-725.400	Fuel	SHELL Fuel #3903	23606	8179300432303	03/06/2013	50.00
101-221.000-730.200	Technical	BRAWLEY CHAMBER OF COMMERCE Good Morning Breakfast	23529		03/08/2013	15.00
101-221.000-730.200	Technical	I. V. TERMITE & PEST CONTRO Pest Control Service	23559	0202829	03/06/2013	29.00
				Total Fire Department		1,381.59
Dept: Fire Station #2						
101-221.100-730.200	Technical	I. V. TERMITE & PEST CONTRO Pest Control Service	23559	0202830	03/06/2013	38.00
				Total Fire Station #2		38.00
Dept: Building Inspection						
101-231.000-740.400	Rent	CANON FINANCIAL SERVICES, INC Building Copier Lease Mar 2013	23534	2027259	02/26/2013	186.52
				Total Building Inspection		186.52
Dept: Animal Control						
101-241.000-720.800	Janitorial	IMPERIAL HARDWARE CO., INC. Cleanser, Trash Bags, Gloves	23567	305396/2	03/11/2013	36.81
101-241.000-725.400	Fuel	MCNEECE BROS OIL COMPANY Fuel/Public Works	23582	804874	02/28/2013	313.12
101-241.000-740.200	Cleaning s	ALSCO AMERICAN LINEN DIV. Uniform Cleaning Services	23519	LYUM712569	03/18/2013	6.56
				Total Animal Control		356.49
Dept: Engineering						
101-311.000-721.110	Food and g	RUBY DOREEN WALLA Reimb For Refreshments	23620		03/17/2013	54.38
101-311.000-725.400	Fuel	MCNEECE BROS OIL COMPANY Fuel/Public Works	23582	804874	02/28/2013	77.19
101-311.000-730.100	Profession	PSOMAS & ASSOCIATES, INC. Construction Support Brawley	23598	87019	03/07/2013	1,205.00
101-311.000-730.200	Technical	BRAWLEY CHAMBER OF COMMERCE Good Morning Breakfast	23529		03/08/2013	15.00
101-311.000-730.200	Technical	MANPOWER Temp Services Thru 3/10/13	23580	25334879	03/10/2013	597.20
101-311.000-730.200	Technical	PESTMASTER SERVICES Pest Control Services	23591	1340276	03/14/2013	35.00
101-311.000-730.200	Technical	DEPARTMENT OF CORRECTIONS Prison Crew Fuel Aug 2012	23544	1800170934	11/16/2012	39.82
101-311.000-740.400	Rent	CANON FINANCIAL SERVICES, INC P.W. Copier Lease Mar 2013	23534	2027257	02/26/2013	646.99

Fund / Department / Account	GL Number / Abbrev	Vendor Name / Invoice Description	Check Number	Invoice Number	Due Date	Amount
Fund: General Fund						
Dept: Engineering						
101-311.000-750.400	Travel	ANA GUTIERREZ Reimb Travel/Federal Aid Proj	23556		03/20/2013	334.97
101-311.000-750.400	Travel	GUILLERMO SILLAS Reimb Travel/Engineer Academy	23607		03/21/2013	13.20
				Total Engineering		3,018.75
Dept: Community Development						
101-411.000-740.400	Rent	CANON FINANCIAL SERVICES, INC Building Copier Lease Mar 2013	23534	2027259	02/26/2013	186.51
101-411.000-750.600	Membership	CREDIT BUREAU OF IMP. COUNT Bulletin Fees	23541	1941	03/01/2013	22.00
				Total Community Development		208.51
Dept: Parks						
101-511.000-720.300	Chemicals	IMPERIAL HARDWARE CO., INC. Green House All Purpose	23567	305865/2	03/14/2013	5.76
101-511.000-720.500	Electrical	CONSOLIDATED ELECTRICAL DIST I Cover, Tape, Nipple, Lock Nut	23539	1964-443852	03/07/2013	123.74
101-511.000-720.500	Electrical	IMPERIAL HARDWARE CO., INC. Bulbs	23567	305162/2	03/08/2013	3.00
101-511.000-720.500	Electrical	IMPERIAL HARDWARE CO., INC. Ground Bar Kit, Lug	23567	304892/2	03/06/2013	10.52
101-511.000-720.500	Electrical	LABRUCHERIE IRRIGATION SUPP Station Controller	23574	66492C	03/11/2013	297.70
101-511.000-720.600	Plumbing s	IMPERIAL HARDWARE CO., INC. Hose Shut Off	23567	304791/2	03/20/2013	1.21
101-511.000-720.600	Plumbing s	LABRUCHERIE IRRIGATION SUPP Rotor Check Valve	23574	66307C	03/05/2013	48.60
101-511.000-720.600	Plumbing s	JIM O'MALLEY PLUMBING Nozzles, Tape	23586	83925	03/06/2013	42.80
101-511.000-720.600	Plumbing s	WATER TECH Pop Up Rotor	23621	209105	03/08/2013	12.30
101-511.000-720.600	Plumbing s	WATER TECH Sprinkler, Full Circle	23621	209319	03/13/2013	156.28
101-511.000-720.600	Plumbing s	WATER TECH Full Circle	23621	209178	03/12/2013	35.95
101-511.000-720.700	Constructi	IMPERIAL TRUSS & LUMBER CO Nuts, Studs, Screws	23569	C10367	03/18/2013	46.06
101-511.000-720.800	Janitorial	IMPERIAL HARDWARE CO., INC. Floor Scrub, Gloves, Bolts	23567	305152/2	03/08/2013	19.27
101-511.000-721.200	Other oper	IMPERIAL HARDWARE CO., INC. Carriage Bolt	23567	290526/2	11/02/2012	3.89
101-511.000-721.200	Other oper	IMPERIAL HARDWARE CO., INC. Shoe, Channel, Glaze	23567	301464/2	02/05/2013	46.47
101-511.000-721.200	Other oper	IMPERIAL HARDWARE CO., INC. Marking Lime	23567	292722/2	11/19/2012	109.52
101-511.000-721.200	Other oper	IMPERIAL HARDWARE CO., INC. Paint, Tape	23567	284749/2	09/18/2012	213.67
101-511.000-721.200	Other oper	IMPERIAL HARDWARE CO., INC. Manure	23567	305024/2	03/07/2013	10.69
101-511.000-721.200	Other oper	IMPERIAL HARDWARE CO., INC. Primer Spray	23567	306379/2	03/18/2013	3.90
101-511.000-721.200	Other oper	IMPERIAL HARDWARE CO., INC. Batteries	23567	305056/2	03/07/2013	17.26
101-511.000-721.200	Other oper	IMPERIAL HARDWARE CO., INC. Padlock	23567	305061/2	03/07/2013	31.40
101-511.000-721.200	Other oper	IMPERIAL HARDWARE CO., INC. Key	23567	304789/2	03/05/2013	6.89
101-511.000-721.200	Other oper	IMPERIAL HARDWARE CO., INC. Hex Bolt, Lock Washer	23567	304533/2	03/04/2013	2.73
101-511.000-721.200	Other oper	IMPERIAL HARDWARE CO., INC. Key	23567	305825/2	03/14/2013	3.49
101-511.000-721.200	Other oper	IMPERIAL HARDWARE CO., INC. Sand Bag	23567	305657/2	03/13/2013	7.54
101-511.000-721.200	Other oper	REDDY ICE, CORPORATION Ice	23601	2713500	03/05/2013	140.05
101-511.000-721.200	Other oper	IMPERIAL HARDWARE CO., INC. Floor Scrub, Gloves, Bolts	23567	305152/2	03/08/2013	0.66
101-511.000-721.900	Small tool	IMPERIAL HARDWARE CO., INC. Trash Cans	23567	306367/2	03/18/2013	172.69

Fund / Department / Account	GL Number / Abbrev	Vendor Name / Invoice Description	Check Number	Invoice Number	Due Date	Amount
Fund: General Fund						
Dept: Parks						
101-511.000-721.900	Small tool	IMPERIAL HARDWARE CO., INC. Pliers	23567	304975/2	03/07/2013	18.69
101-511.000-725.400	Fuel	MCNEECE BROS OIL COMPANY Fuel	23582	174130	03/05/2013	18.68
101-511.000-730.200	Technical	BRAWLEY CHAMBER OF COMMERCE Good Morning Breakfast	23529		03/08/2013	30.00
101-511.000-730.200	Technical	DEPARTMENT OF CORRECTIONS Prison Crew Fuel Aug 2012	23544	1800170934	11/16/2012	39.83
				Total Parks		1,681.24
Dept: Recreation & Lions Center						
101-521.000-470.110	Rents and	GINA CARBALLO Refund Deposit/Lions Center	23536	724365	02/11/2013	60.00
101-521.000-720.500	Electrical	IMPERIAL HARDWARE CO., INC. Conduit, Wire	23567	305918/2	03/14/2013	12.94
101-521.000-720.600	Plumbing s	IMPERIAL HARDWARE CO., INC. Wire Nut, Couplings	23567	305917/2	03/14/2013	108.44
101-521.000-720.600	Plumbing s	IMPERIAL HARDWARE CO., INC. Solenoid	23567	304621/2	03/04/2013	25.50
101-521.000-720.800	Janitorial	WAXIE SANITARY SUPPLY Paper Towels	23622	73791493	02/27/2013	103.84
101-521.000-721.200	Other oper	IMPERIAL HARDWARE CO., INC. Duct Tape	23567	291043/2	11/06/2012	4.57
101-521.000-721.200	Other oper	IMPERIAL HARDWARE CO., INC. Paint	23567	274321/2	06/21/2012	27.93
101-521.000-721.200	Other oper	IMPERIAL HARDWARE CO., INC. Poultry Net	23567	276726/2	07/11/2012	26.86
101-521.000-721.200	Other oper	IMPERIAL HARDWARE CO., INC. Hat/A. Beltran	23567	274326/2	06/21/2012	21.54
101-521.000-721.200	Other oper	IMPERIAL HARDWARE CO., INC. Battery, Turf Builder	23567	304724/2	03/05/2013	88.71
101-521.000-721.900	Small tool	IMPERIAL HARDWARE CO., INC. Tiller	23567	535918/2	03/08/2013	59.40
101-521.000-721.900	Small tool	IMPERIAL HARDWARE CO., INC. Hedge Sheers	23567	288118/2	10/15/2012	23.46
101-521.000-730.200	Technical	PESTMASTER SERVICES Pest Control Services	23591	1340161	03/12/2013	35.00
101-521.000-740.200	Cleaning s	ALSCO AMERICAN LINEN DIV. Cleaning Services	23519	LYUM707485	03/04/2013	32.57
101-521.000-740.200	Cleaning s	ALSCO AMERICAN LINEN DIV. Cleaning Services	23519	LYUM710059	03/11/2013	32.37
101-521.000-740.200	Cleaning s	ALSCO AMERICAN LINEN DIV. Cleaning Services	23519	LYUM712570	03/18/2013	32.37
101-521.000-740.200	Cleaning s	ALSCO AMERICAN LINEN DIV. Cleaning Services	23519	LYUM694521	01/28/2013	32.36
101-521.000-740.200	Cleaning s	LASALLE JANITORIAL SERVICES Cleaning Services	23575	1094	03/08/2013	225.00
101-521.000-750.200	Communicat	AT&T Telephone Services/Teen Center	23522		03/06/2013	86.78
				Total Recreation & Lions Center		1,039.64
Dept: Recreation Leagues						
101-521.100-721.200	Other oper	AYERS DISTRIBUTING Toy & Candy Plastic Eggs	23525	7665	02/26/2013	272.00
101-521.100-730.200	Technical	LAURA P. BLAKE Zumba Instructor Morning	23528	212813	03/13/2013	272.00
101-521.100-730.200	Technical	CALEB BAEZA Basketball Coach 2/19-3/7	23526		03/15/2013	96.00
101-521.100-730.200	Technical	VIRIDIANA Y. CATLETT Zumba Instructor Feb.	23538	2122813	03/01/2013	89.25
101-521.100-730.200	Technical	BERTHA ALICIA WHITE Dance Instructor Feb 2013	23623	21282013-1	03/15/2013	186.15
				Total Recreation Leagues		915.40
Dept: Senior Citizens Center						
101-522.000-720.600	Plumbing s	IMPERIAL HARDWARE CO., INC. Sprinkler	23567	305128/2	03/08/2013	4.76
101-522.000-721.200	Other oper	IMPERIAL HARDWARE CO., INC. Padlock, Lawn Food	23567	305699/2	03/13/2013	48.25

Fund / Department / Account	GL Number / Abbrev	Vendor Name / Invoice Description	Check Number	Invoice Number	Due Date	Amount
Fund: General Fund						
Dept: Senior Citizens Center						
101-522.000-730.200	Technical	PESTMASTER SERVICES Pest Control Services	23591	1339807	02/28/2013	30.00
101-522.000-740.200	Cleaning s	LASALLE JANITORIAL SERVICES Cleaning Services	23575	1094	03/08/2013	130.00
				Total Senior Citizens Center		213.01
Dept: Library						
101-551.000-720.100	Office sup	STAPLES, INC Ink Cartridges,Correction Tape	23613	71381	03/07/2013	425.97
101-551.000-720.200	Books and	CSU SAN MARCOS LIBRARY Book Replacement Charge	23542	161	12/19/2012	115.00
101-551.000-720.200	Books and	FIFTH AVENUE BOOK CENTER Books	23552	IN00000014	02/27/2013	39.90
101-551.000-720.200	Books and	GALE GROUP Jerry B Jenkins Books	23554	98448530	01/23/2013	77.73
101-551.000-720.200	Books and	GALE GROUP Historipal Plan Books	23554	98749866	02/19/2013	51.01
101-551.000-720.200	Books and	SUSAN MANGER Reimburse For Books	23579		03/13/2013	106.92
101-551.000-720.210	Audiovisua	AUDIOGO Audio Books	23523	472035	12/20/2012	191.91
101-551.000-720.210	Audiovisua	AUDIOGO Audio Books	23523	476538	01/28/2013	40.00
101-551.000-720.210	Audiovisua	AUDIOGO Audio Books	23523	479789	02/20/2013	120.00
101-551.000-721.900	Small tool	FOLLETT SOFTWARE COMPANY Wireless Scanner	23553	1059035	03/05/2013	1,356.43
101-551.000-730.200	Technical	IMPERIAL VALLEY COLLEGE Work Study Students Jan 2013	23570		03/04/2013	462.75
101-551.000-730.200	Technical	PROTECTION ONE ALARM Alarm Monitoring 3/1-3/31/13	23597		03/05/2013	37.70
101-551.000-730.200	Technical	PESTMASTER SERVICES Pest Control Services	23591	1340021MT	03/07/2013	35.00
101-551.000-740.400	Rent	BRAWLEY MASONIC TEMPLE ASSO Office Space Rent	23530		03/18/2013	5,500.00
101-551.000-750.600	Membership	SCLLN 2013 SCLLN Membership	23605	1006-13	02/11/2013	150.00
				Total Library		8,710.32
					Fund Total	119,072.47
Fund: Gas Tax						
Dept: Street Maintenance & Improve.						
211-312.000-720.700	Constructi	IMPERIAL TRUSS & LUMBER CO Boards For Signs	23569	C9512	01/11/2013	62.21
211-312.000-721.200	Other oper	ACME SAFETY & SUPPLY CORP. Rivets/Streets Signs	23516	081934-00	01/17/2013	110.16
211-312.000-721.200	Other oper	ACME SAFETY & SUPPLY CORP. Signs/Various Streets	23516	081857-00	01/11/2013	127.44
211-312.000-721.200	Other oper	IMPERIAL HARDWARE CO., INC. Diesel Can, Funnel	23567	K99360/2	01/17/2013	43.90
211-312.000-721.200	Other oper	IMPERIAL HARDWARE CO., INC. Faceshield, Dust Mask	23567	299355/2	01/17/2013	83.94
211-312.000-721.900	Small tool	IMPERIAL TRUSS & LUMBER CO Nail Gun	23569	C9513	01/11/2013	97.19
211-312.000-725.200	Electricit	IMPERIAL IRRIGATION DISTRIC Street Lights 2/7/13-3/8/13	23568		03/11/2013	8,326.49
				Total Street Maintenance & Improve.		8,851.33
					Fund Total	8,851.33
Fund: SB 821 - Ped. & Bic. Fac.						
Dept: Bicycle & Pedestrian Fac.						
213-313.000-730.200	Technical	VALLEY PETROLEUM EQUIPMENT INC Remove Underground Tank	23618	31206	03/15/2013	9,900.00
				Total Bicycle & Pedestrian Fac.		9,900.00

Fund / Department / Account	GL Number Abbrev	Vendor Name / Invoice Description	Check Number	Invoice Number	Due Date	Amount
Fund: SB 821 - Ped. & Bic. Fac.						
					Fund Total	9,900.00
Fund: Bernardo Padilla Land/Light						
Dept: Parks, Landscape & Lighting						
241-511.100-725.200	Electricit	IMPERIAL IRRIGATION DISTRIC Street Lights 2/7/13-3/8/13	23568		03/11/2013	103.97
					Total Parks, Landscape & Lighting	103.97
					Fund Total	103.97
Fund: CFD 05-1 Victoria Park						
Dept: Comm Fac Dist						
243-195.000-725.200	Electricit	IMPERIAL IRRIGATION DISTRIC Street Lights 2/7/13-3/8/13	23568		03/11/2013	80.55
					Total Comm Fac Dist	80.55
					Fund Total	80.55
Fund: CFD 05-4 Latigo Ranch						
Dept: Comm Fac Dist						
244-195.000-725.200	Electricit	IMPERIAL IRRIGATION DISTRIC Street Lights 2/7/13-3/8/13	23568		03/11/2013	85.92
					Total Comm Fac Dist	85.92
					Fund Total	85.92
Fund: CFD 05-3 La Paloma						
Dept: Comm Fac Dist						
245-195.000-725.200	Electricit	IMPERIAL IRRIGATION DISTRIC Street Lights 2/7/13-3/8/13	23568		03/11/2013	209.43
					Total Comm Fac Dist	209.43
					Fund Total	209.43
Fund: CFD 06-1 Malan Park						
Dept: Comm Fac Dist						
246-195.000-725.200	Electricit	IMPERIAL IRRIGATION DISTRIC Street Lights 2/7/13-3/8/13	23568		03/11/2013	69.81
					Total Comm Fac Dist	69.81
					Fund Total	69.81
Fund: CFD 07-1 Luckey Ranch						
Dept: Comm Fac Dist						
247-195.000-725.200	Electricit	IMPERIAL IRRIGATION DISTRIC Street Lights 2/7/13-3/8/13	23568		03/11/2013	85.92
					Total Comm Fac Dist	85.92
					Fund Total	85.92
Fund: CFD 07-2 Springhouse						
Dept: Comm Fac Dist						
248-195.000-725.200	Electricit	IMPERIAL IRRIGATION DISTRIC Street Lights 2/7/13-3/8/13	23568		03/11/2013	5.37
					Total Comm Fac Dist	5.37
					Fund Total	5.37
Fund: Capital Projects - Streets						
Dept: Cattle Call Improvements						
421-312.221-730.100	Profession	PSOMAS & ASSOCIATES, INC. Pedestrian & Bike Improvements	23598	87020	03/07/2013	1,531.90

Fund / Department / Account	GL Number / Abbrev	Vendor Name / Invoice Description	Check Number	Invoice Number	Due Date	Amount
Fund: Capital Projects - Streets						
Dept: Cattle Call Improvements						
					Total Cattle Call Improvements	1,531.90
					Fund Total	1,531.90
Fund: Water						
Dept:						
501-000.000-205.200	Water depo	ISABEL DUARTE Refund Deposit 931 J Street	23548		03/13/2013	78.50
501-000.000-205.200	Water depo	JUAN C. GUZMAN Refund Deposit 1146 Mesquite	23557		03/18/2013	191.74
501-000.000-205.200	Water depo	JERRY MUDRA Refund Dep/OvPymt 447 WMAG	23584		03/13/2013	194.58
501-000.000-205.200	Water depo	PRINCE & ASSOCIATES Refund Dep/OvPymt 1119 Pecan	23595		03/12/2013	191.74
501-000.000-205.200	Water depo	PRINCE & ASSOCIATES Refund Dep/OvPymt 480 W C St	23595		03/11/2013	191.74
501-000.000-205.200	Water depo	OSCAR ROBLES Refund Deposit 409 SEAS	23602		03/13/2013	82.43
501-000.000-205.200	Water depo	JENNIFER SINGH Refund Deposit 980 Birch St	23608		03/13/2013	63.19
501-000.000-205.200	Water depo	JEANETTE TORREZ Refund Dep/OvPymt 1290 K St	23615		03/11/2013	176.68
501-000.000-205.200	Water depo	DAVID VARGAS Refund Deposit 274 I Street	23619		03/18/2013	188.58
					Total	1,359.18
Dept: Water Treatment						
501-321.000-440.710	Water sale	PRINCE & ASSOCIATES Refund Dep/OvPymt 1119 Pecan	23595		03/12/2013	16.48
501-321.000-440.710	Water sale	LAURA SOBERANES Refund OverPayment 1059 WALS	23609		03/13/2013	177.54
501-321.000-720.500	Electrical	IMPERIAL HARDWARE CO., INC. Extension Cord	23567	304928/2	03/06/2013	47.25
501-321.000-720.600	Plumbing s	WATER TECH Rotor, Bushing	23621	209133	03/21/2013	63.17
501-321.000-721.100	Uniforms	BRAWLEY WORKWEAR & SHOES Safety Boots/J. Gutierrez	23532	4884	12/12/2012	145.41
501-321.000-721.200	Other oper	IMPERIAL HARDWARE CO., INC. Trimmer Line, Batteries	23567	305031/2	03/07/2013	22.56
501-321.000-721.200	Other oper	IMPERIAL HARDWARE CO., INC. Roller Covers, Brushes, Liners	23567	305076/2	03/07/2013	16.11
501-321.000-721.200	Other oper	IMPERIAL HARDWARE CO., INC. Gloves, Detergent, Filters	23567	305334/2	03/10/2013	75.39
501-321.000-721.900	Small tool	IMPERIAL HARDWARE CO., INC. Aluminum Scoop	23567	304876/2	03/06/2013	38.38
501-321.000-725.400	Fuel	MCNEECE BROS OIL COMPANY Fuel/Public Works	23582	804874	02/28/2013	509.01
501-321.000-730.200	Technical	CREATIVE CONTROL SYSTEM PLC, SCADA Programming	23540	2013-01	02/22/2013	2,000.00
501-321.000-730.200	Technical	ORANGE COMMERCIAL CREDIT Aluminum Analysis	23590	5891	02/07/2013	960.00
501-321.000-750.200	Communicat	A T & T Telephone Services 3/7-4/9	23515		03/07/2013	5.09
					Total Water Treatment	4,076.39
Dept: Water Distribution						
501-322.000-720.300	Chemicals	IMPERIAL HARDWARE CO., INC. Drain Opener	23567	261700/2	03/08/2013	22.19
501-322.000-720.300	Chemicals	IMPERIAL HARDWARE CO., INC. Sharpie, Roach Spray	23567	303408/2	02/21/2013	5.45
501-322.000-720.600	Plumbing s	IMPERIAL HARDWARE CO., INC. Pipe Clamp	23567	300204/2	01/24/2013	8.87
501-322.000-720.600	Plumbing s	IMPERIAL HARDWARE CO., INC. Jug, Primer, Slip Ell, WD40	23567	265940/2	04/12/2012	10.88
501-322.000-720.700	Constructi	IMPERIAL HARDWARE CO., INC. Tape Rule, Wrench, Stakes	23567	258197/2	02/07/2013	5.82
501-322.000-720.700	Constructi	IMPERIAL HARDWARE CO., INC. Construction Bar, Baking Soda	23567	298468/2	01/10/2013	38.43

Fund / Department / Account	GL Number / Abbrev	Vendor Name / Invoice Description	Check Number	Invoice Number	Due Date	Amount
Fund: Water						
Dept: Water Distribution						
501-322.000-721.200	Other oper	IMPERIAL HARDWARE CO., INC. Batteries	23567	256137/2	01/19/2013	65.72
501-322.000-721.200	Other oper	IMPERIAL HARDWARE CO., INC. Jug, Primer, Slip Ell, WD40	23567	265940/2	04/12/2012	25.98
501-322.000-721.200	Other oper	IMPERIAL HARDWARE CO., INC. Utility Bar, Kwik Weld, Marker	23567	297703/2	01/03/2013	18.46
501-322.000-721.200	Other oper	IMPERIAL HARDWARE CO., INC. Cleaner, Trash Bags, Brushes	23567	298303	01/09/2013	24.93
501-322.000-721.200	Other oper	IMPERIAL HARDWARE CO., INC. Paint Markers	23567	257004/2	01/27/2013	21.40
501-322.000-721.200	Other oper	IMPERIAL HARDWARE CO., INC. Construction Bar, Baking Soda	23567	298468/2	01/10/2013	2.58
501-322.000-721.200	Other oper	IMPERIAL HARDWARE CO., INC. Staples, Power Bits	23567	304508/2	03/04/2013	6.77
501-322.000-721.200	Other oper	IMPERIAL HARDWARE CO., INC. Sharpie, Roach Spray	23567	303408/2	02/21/2013	2.74
501-322.000-721.200	Other oper	NORTHEND AUTOPARTS, INC. Rags, Caster Wheels	23585	459693	02/27/2013	237.36
501-322.000-721.200	Other oper	R.J. SAFETY SUPPLY CO., INC Fire Extenguishers	23599	310841-0002	03/04/2013	185.52
501-322.000-721.200	Other oper	STIFF EQUIPMENT INC. Angle Iron	23614	41873	03/04/2013	57.02
501-322.000-721.200	Other oper	NORTHEND AUTOPARTS, INC. D Earth	23585	458003	02/11/2013	89.16
501-322.000-721.900	Small tool	BRAWLEY TRACTOR PARTS Screwdrivers, Wrenches	23531	29916	01/14/2013	69.58
501-322.000-721.900	Small tool	IMPERIAL HARDWARE CO., INC. Tape Rule, Wrench, Stakes	23567	258197/2	02/07/2013	52.02
501-322.000-725.400	Fuel	MCNEECE BROS OIL COMPANY Fuel/Public Works	23582	804874	02/28/2013	2,457.17
501-322.000-750.200	Communicat	A T & T Telephone Services 3/7-4/9	23515		03/07/2013	31.77
501-322.000-750.200	Communicat	UNDERGROUND SERVICE ALERT, INC Dig Alert Tickets Feb. 2012	23616	220130069	03/01/2013	40.50
501-322.000-750.200	Communicat	UNDERGROUND SERVICE ALERT, INC Dig Alert Tickets Jan. 2012	23616	120130070	02/01/2013	43.50
				Total Water Distribution		3,523.82
					Fund Total	8,959.39
Fund: Wastewater						
Dept: Wastewater Collection						
511-331.000-440.730	Sewer serv	JEANETTE TORREZ Refund Dep/OvPymt 1290 K St	23615		03/11/2013	12.32
511-331.000-720.700	Constructi	IMPERIAL HARDWARE CO., INC. Nails, Playwood	23567	297592/2	01/02/2013	25.16
511-331.000-750.200	Communicat	AT&T-CALNET 2 Telephone Services 2/3-3/2	23521		03/03/2013	15.99
511-331.000-750.500	Training	GUSTAVO RODRIGUEZ Travel Adv/WWTP Review	23603		03/21/2013	1,010.07
				Total Wastewater Collection		1,063.54
Dept: Wastewater treatment						
511-332.000-720.500	Electrical	ONE SOURCE DISTRIBUTORS, IN Starter	23589	S3958931.002	03/01/2013	152.20
511-332.000-720.500	Electrical	ONE SOURCE DISTRIBUTORS, IN Mini Lamp	23589	S3969546.001	03/05/2013	17.25
511-332.000-720.500	Electrical	ONE SOURCE DISTRIBUTORS, IN Starter	23589	S3969546.002	03/06/2013	370.27
511-332.000-725.200	Electricit	IMPERIAL IRRIGATION DISTRIC Power Bills 2/4/13-3/5/13	23568		03/12/2013	27,751.90
511-332.000-725.400	Fuel	MCNEECE BROS OIL COMPANY Fuel/Public Works	23582	804874	02/28/2013	94.70
511-332.000-730.100	Profession	LEE & RO. INC. On Call National Beef Support	23576	466-59/02	03/07/2013	1,456.74
511-332.000-730.200	Technical	ORANGE COMMERCIAL CREDIT Microbiology Analysis	23590	5943	03/11/2013	328.00
511-332.000-730.200	Technical	ORANGE COMMERCIAL CREDIT Microbiology Analysis	23590	5941	03/11/2013	3,414.00

Fund / Department / Account	GL Number Abbrev	Vendor Name / Invoice Description	Check Number	Invoice Number	Due Date	Amount
Fund: Wastewater						
Dept: Wastewater treatment						
511-332.000-730.200	Technical	ORANGE COMMERCIAL CREDIT Effluent Analysis	23590	5942	03/11/2013	2,736.00
511-332.000-750.500	Training	OCT WATER QUALITY ACADEMY WW Review/G. Rodrgiguez	23588		03/20/2013	575.00
511-332.000-750.500	Training	GUSTAVO RODRIGUEZ Travel Adv/WWTP Review	23603		03/21/2013	826.42
				Total Wastewater treatment		37,722.48
					Fund Total	38,786.02
Fund: Wastewater Projects						
Dept: Wastewater treatment						
512-332.000-730.100	Profession	LEE & RO. INC. WWTP Improvements Project	23576	466/56	03/07/2013	8,809.77
				Total Wastewater treatment		8,809.77
					Fund Total	8,809.77
Fund: Solid Waste						
Dept: Solid Waste Collection						
521-341.000-440.740	Solid wast	JERRY MUDRA Refund Dep/OvPymt 447 WMAG	23584		03/13/2013	4.70
521-341.000-440.740	Solid wast	PRINCE & ASSOCIATES Refund Dep/OvPymt 480 W C St	23595		03/11/2013	7.65
521-341.000-440.740	Solid wast	JEANETTE TORREZ Refund Dep/OvPymt 1290 K St	23615		03/11/2013	20.11
521-341.000-730.200	Technical	ALLIED WASTE SERVICES #467 Solid Waste Services Mar. 2013	23518		03/18/2013	86,712.04
				Total Solid Waste Collection		86,744.50
					Fund Total	86,744.50
Fund: Maintenance						
Dept: Vehicle Maintenance Shop						
601-801.000-720.300	Chemicals	AUTO ZONE, INC. #2804 Antifreeze #27 Streets	23524	2804722089	03/12/2013	56.12
601-801.000-720.400	Automotive	AUTO ZONE, INC. #2804 Starter #202	23524	2804721022	03/11/2013	137.69
601-801.000-720.400	Automotive	BRAWLEY TRACTOR PARTS Filters #63 Parks	23531	31924	03/13/2013	21.64
601-801.000-720.400	Automotive	DION INTERNATIONAL TRUCKS, LLC Spark Plugs, Wires, Gasket #16	23546	C171257	03/15/2012	335.04
601-801.000-720.400	Automotive	HYDRAULICS & BEARING SUPPLY IN Hose #22 Streets	23558	24920	03/07/2013	48.89
601-801.000-720.400	Automotive	HYDRAULICS & BEARING SUPPLY IN Seals #92 Parks	23558	25044	03/13/2013	6.94
601-801.000-720.400	Automotive	HYDRAULICS & BEARING SUPPLY IN Fuel Line #16 Streets	23558	25074	03/14/2013	72.39
601-801.000-720.400	Automotive	JORDAN IMPLEMENT, INC. Nuts, Washers/Shop Stock	23572	P74287	03/13/2013	23.10
601-801.000-720.400	Automotive	JORDAN IMPLEMENT, INC. Struts #50 WTP	23572	P74288	03/13/2013	302.91
601-801.000-720.400	Automotive	KEARNY PEARSON FORD, LLC. Lug Nuts #909 P.D.	23573	674754	03/11/2013	79.75
601-801.000-720.400	Automotive	KEARNY PEARSON FORD, LLC. Tube Assembly, O-Rings #915 PD	23573	674771	03/11/2013	81.57
601-801.000-720.400	Automotive	KEARNY PEARSON FORD, LLC. Lug Nuts #903 P.D.	23573	674903	03/12/2013	22.42
601-801.000-720.400	Automotive	KEARNY PEARSON FORD, LLC. O-Ring Kit	23573	674906	03/12/2013	12.67
601-801.000-720.400	Automotive	KEARNY PEARSON FORD, LLC. Vapor Tube #915 P.D.	23573	675181	03/12/2013	35.14
601-801.000-720.400	Automotive	KEARNY PEARSON FORD, LLC. Rail O-Rings #915 P.D.	23573	675206	03/12/2013	39.20
601-801.000-720.400	Automotive	THE LIGHTHOUSE, INC. Assorted Lights/Shop	23578	0848548	03/12/2013	54.34

Fund / Department / Account	GL Number / Abbrev	Vendor Name / Invoice Description	Check Number	Invoice Number	Due Date	Amount
Fund: Maintenance						
Dept: Vehicle Maintenance Shop						
601-801.000-720.400	Automotive	THE LIGHTHOUSE, INC. Trailer Socket #99T Parks	23578	0848492	03/12/2013	8.93
601-801.000-720.400	Automotive	NORTHEND AUTOPARTS, INC. Hose Clamps/Shop Stock	23585	460999	03/11/2013	11.66
601-801.000-720.400	Automotive	NORTHEND AUTOPARTS, INC. Belt #92 Parks	23585	461087	03/12/2013	11.16
601-801.000-720.400	Automotive	NORTHEND AUTOPARTS, INC. Spark Plugs	23585	461155	03/12/2013	15.98
601-801.000-720.400	Automotive	NORTHEND AUTOPARTS, INC. Cap, Ignition Module #16 Sts	23585	461172	03/12/2013	112.11
601-801.000-720.400	Automotive	STIFF EQUIPMENT INC. Bolts #85 Parks	23614	42091	03/13/2013	2.83
601-801.000-720.410	Tires	IMPERIAL VALLEY CYCLE CENTER I Tires #50 Water Plant	23571	28133	03/13/2013	295.58
601-801.000-720.420	Oils & lub	MCNEECE BROS OIL COMPANY Bulk Grease/Shop	23582	173968	02/28/2013	104.65
601-801.000-720.500	Electrical	AUTO ZONE, INC. #2804 Battery #202	23524	2804718064	03/08/2013	98.23
601-801.000-721.100	Uniforms	BRAWLEY WORKWEAR & SHOES Safety Boots/Alex Labastida	23532	6090	03/14/2013	145.75
601-801.000-725.400	Fuel	MCNEECE BROS OIL COMPANY Fuel/Public Works	23582	804874	02/28/2013	86.92
601-801.000-740.100	Repair & m	DANIELS TIRE SERVICE Oil Change #210 Engineering	23543	226010457	03/12/2013	75.31
601-801.000-740.100	Repair & m	MANSFIELD GAS EQUIPMENT Modules,Diagnose, Travel Time	23581	3000	01/04/2013	10,148.46
601-801.000-740.100	Repair & m	MANSFIELD GAS EQUIPMENT Replace Pump Module #16 Sts	23581	2884	12/26/2012	637.06
601-801.000-740.100	Repair & m	STIFF EQUIPMENT INC. Repair Bucket #22 Streets	23614	42015	03/08/2013	392.12
601-801.000-750.400	Travel	PEDRO SANCHEZ Travel Adv/Fire Mechanics Acad	23604		03/21/2013	1,118.61
					Total Vehicle Maintenance Shop	14,595.17
Dept: Equipment rental & acquisition						
601-803.000-725.400	Fuel	MCNEECE BROS OIL COMPANY Fuel/Public Works	23582	804874	02/28/2013	1,149.37
					Total Equipment rental & acquisition	1,149.37
					Fund Total	15,744.54
					Grand Total	299,040.89

COUNCIL AGENDA REPORT
City of Brawley

Meeting Date: 04/2/2013
City Manager:

PREPARED BY: Ruby D. Walla, Finance Director

PRESENTED BY: Ruby D. Walla, Finance Director

SUBJECT: Investment of City monies in Local Agency Investment Fund (LAIF)

CITY MANAGER RECOMMENDATION: Approve update of Resolution of the City Council of the City of Brawley, authorizing investment of City monies in Local Agency Investment Fund.

DISCUSSION: This is an update to the City's Resolution No. 88-16 to properly reflect names and titles of authorized personnel who may deposit and/or withdraw funds in the Local Agency Investment Fund for the City of Brawley. The authorized personnel are as follows:

Jim Hamilton, City Treasurer
Ruby Doreen Walla, Finance Director
Rosa Ramirez, Assistant Finance Director
Stella Limon, Accountant/Utility Billing Supervisor

FISCAL IMPACT: None

ATTACHMENTS: Resolution 2013-
Resolution 88-16

RESOLUTION NO. 2013-

RESOLUTION OF THE CITY COUNCIL OF THE CITY OF BRAWLEY, CALIFORNIA, AUTHORIZING INVESTMENT OF CITY MONIES IN LOCAL AGENCY INVESTMENT FUND (LAIF)

WHEREAS, pursuant to Chapter 730 of the Statutes of 1976, Section 16429.1 was added to California Government Code to create a Local Agency Investment Fund in the State Treasury for the deposit of money of a local agency for purposes of investment by the State Treasurer; and

WHEREAS, the City Council does hereby find that the deposit and withdrawal of money in the Local Agency Investment Fund in accordance with provisions of Section 16429.1 of the Government Code for the purposes of investment as stated therein is in the best interest of the City of Brawley.

NOW, THEREFORE, THE CITY COUNCIL OF THE CITY OF BRAWLEY, CALIFORNIA DOES HEREBY RESOLVE that the City Council authorizes the deposit and withdrawal of City of Brawley monies in the Local Agency Investment Fund in the State Treasury in accordance with the provisions of Section 16429.1 of the Government Code for the purpose of investment as stated therein.

BE IT FURTHER RESOLVED that the following City officers or their successors in office shall be authorized to order the deposit or withdrawal of monies in the Local Agency Investment Fund:

Jim Hamilton	City Treasurer
Ruby Doreen Walla	Finance Director
Rosa Ramirez	Assistant Finance Director
Stella Limon	Senior Accountant

Resolution No. 88-16 of the City of Brawley adopted May 2, 1988 is hereby rescinded.

APPROVED, PASSED AND ADOPTED at a regular meeting of the City Council of the City of Brawley, Brawley, California, held on the 2nd day of April, 2013.

CITY OF BRAWLEY

_____
Sam A. Couchman, Mayor

ATTEST:

_____
Janet Smith, Deputy City Clerk

APPROVED AS TO FORM:

_____
Dennis H. Morita, City Attorney

STATE OF CALIFORNIA)
COUNTY OF IMPERIAL) ss
CITY OF BRAWLEY)

I, ***JANET P. SMITH***, Deputy City Clerk of the City of Brawley, California, ***DO HEREBY CERTIFY*** that the foregoing Resolution No. 2013- was passed and adopted by the City Council of the City of Brawley, California, at a regular meeting held on the ___th day of April, 2013, and that it was so adopted by the following roll call vote: m/s/c

AYES:
NAYES:
ABSTAIN:
ABSENT:

Dated:

_____

Janet P. Smith, *Deputy* City Clerk

RESOLUTION NO. 88-16

RESOLUTION OF THE CITY COUNCIL OF THE CITY OF BRAWLEY, CALIFORNIA, AUTHORIZING INVESTMENT OF CITY MONIES IN LOCAL AGENCY INVESTMENT FUND

WHEREAS, pursuant to Chapter 730 of the Statutes of 1976 Section 16429.1 was added to California Government Code to create a Local Agency Investment Fund in the State Treasury for the deposit of money of a local agency for purposes of investment by the State Treasurer; and

WHEREAS, the City Council does hereby find that the deposit and withdrawal of money in the Local Agency Investment Fund in accordance with provisions of Section 16429.1 of the Government Code for the purposes of investment as stated therein as in the best interest of the City of Brawley.

NOW, THEREFORE, BE IT RESOLVED that the City Council does hereby authorize the deposit and withdrawal if City of Brawley monies in the Local Agency Investment Fund in the State Treasury in accordance with the provisions of Section 16429.1 of the Government Code for the purpose of investment as stated therein.

BE IT FURTHER RESOLVED that the following City officers or their successors in office shall be authorized to order the deposit or withdrawal of monies in the Local Agency Investment Fund:

Marjorie B. Panosh	City Treasurer
Harry Jensen	Director of Finance
Marvalee Brooks	Asst. Finance Officer

Resolution No. 3638 of the City of Brawley adopted March 5, 1984 is hereby rescinded.

APPROVED, PASSED AND ADOPTED this 2nd day of May, 1988.

CITY OF BRAWLEY, CALIFORNIA

Robert L. Noriega, Mayor

ATTEST:

Janet P. Smith, City Clerk

COUNCIL AGENDA REPORT
City of Brawley

Meeting Date: April 02, 2012
City Manager: RBM

PREPARED BY: James Arthur, I.T. Administrator
PRESENTED BY: Mark Gillmore, Chief of Police

SUBJECT: Emergency Operations Center (EOC) Network wiring installation

CITY MANAGER RECOMMENDATION: Approve expenditure in the amount of $17,961.19 to Total Technologies Solutions for EOC Network Wiring installation

DISCUSSION:

The IT Administrator requests approval of funds to provide the EOC with network cabling for Internet and phone services within the building. Network cabling was not included in the construction cost estimates for the EOC.

These funds cover the installation of cabling, electronic equipment.

Quotes were obtained from three (3) companies:

Total Technologies Solutions Brawley, CA	$17,961.00
Golden Star Technology Inc. Cerritos, CA	$25,023.47
SIGMAnet Brickell, CA	$31,014.36

FISCAL IMPACT: $17,961.19, Federal Asset Forfeiture Funds

ATTACHMENTS: Three (3) Quotes

SIGMAnet®
We Take Care of IT™

Date: 3/21/2013

QUOTATION

Quote: 5130298

To:
James Arthur
City of Brawley
Brawley CALIFORNIA, 92227
Tel: 760-351-8805 Fax:

From:
Linda Neely
SIGMAnet
Ontario, CA 91761
Tel: 909-230-7085 Fax: 909-937-9125

Comments:

	Part Number	Manufacturer	Description	Qty	Unit Price	Amount
1	Viper Cabling		Install 2) 2 Post racks Black Mid Atlantic with Vertical front and back side management with horizontal 2 RU managers between patch and switching. Provide 225 Cat 6 Patch cables at 7 feet for racks and 10 feet for stations. Connect aprox 15 feet of ladder rack to racks and walls per drawing. Install conduit stub in ceiling for chase. Provide and install 300 feet 12 strand 10 gig OM3 Multimode fiber optics terminated LC to LC Patched to bulkheads within 1RU Rack mounted LIU enclosures. Install 106 Category 6E 550 Mhrz cables for distribution. Terminate at Cat6 Patch panels in rack and to flush mount plates at walls. Test all systems and label to approved scheme. Labor and Materials	1	28,717.00	28,717.00

Sub Total :	$28,717.00
Tax :	$2,297.36
Shipping :	$0.00
Total :	**$31,014.36**

Quotation is valid for 30 Days.
Promotional pricing, price quoted net of rebate pricing & limited time pricing may expire prior to the 30 days from date of quote and maybe subject to change without notice. All prices are F.O.B. Ontario, California
Please feel free to contact me if you have any further questions. Thank You.

SIGMAnet®
We Take Care of IT™

Date: 3/21/2013

QUOTATION

Quote: 5130298

To:
James Arthur
City of Brawley
Brawley CALIFORNIA, 92227
Tel: 760-351-8805 Fax:

From:
Linda Neely
SIGMAnet
Ontario, CA 91761
Tel: 909-230-7085 Fax: 909-937-9125

Comments:

	Part Number	Manufacturer	Description	Qty	Unit Price	Amount
1	Viper Cabling		Install 2) 2 Post racks Black Mid Atlantic with Vertical front and back side management with horizontal 2 RU managers between patch and switching. Provide 225 Cat 6 Patch cables at 7 feet for racks and 10 feet for stations. Connect aprox 15 feet of ladder rack to racks and walls per drawing. Install conduit stub in ceiling for chase. Provide and install 300 feet 12 strand 10 gig OM3 Multimode fiber optics terminated LC to LC Patched to bulkheads within 1RU Rack mounted LIU enclosures. Install 106 Category 6E 550 Mhrz cables for distribution. Terminate at Cat6 Patch panels in rack and to flush mount plates at walls. Test all systems and label to approved scheme. Labor and Materials	1	28,717.00	28,717.00

Sub Total :	$28,717.00
Tax :	$2,297.36
Shipping :	$0.00
Total :	**$31,014.36**

Quotation is valid for 30 Days.
Promotional pricing, price quoted net of rebate pricing & limited time pricing may expire prior to the 30 days from date of quote and maybe subject to change without notice. All prices are F.O.B. Ontario, California
Please feel free to contact me if you have any further questions. Thank You.

Golden Star Technology Inc. DBA: GST Inc.
13043 166th Street
Cerritos, California 90703
United States
http://www.gstes.com

Quotation

Date
Mar 20, 2013 4:08 PM PDT

Expiration Date
Apr 19, 2013

Doc #
68305 - rev 1 of 1

Description
Network Cable installation Quote

SalesRep
Sales, GST
(P) 562-345-8700

Customer Contact
Arthur, James
(P) 760-563-2451
(F) 760-351-1719
JArthur@brawley-ca.gov

Customer
City of Brawley (CO1697)
351 Main Street
Brawley , California 92227
(P) 760-563-2451

Bill To
City of Brawley
Accounts, Payable
351 Main Street
Brawley , California 92227
(P) 760-563-2451

Ship To
City of Brawley
Accounts, Payable
351 Main Street
Brawley , California 92227
(P) 760-563-2451

Customer PO: None	**Terms:** Undefined	**Ship Via:** FedEx Ground
Special Instructions: None		**Carrier Account #:** None

Item	Description	Part #	Qty	Tax	Unit Price	Total
	REQUIREMENT 9					
1	Provide and install two floor standing racks		1	No	$0.00	$0.00
2	Installation of Racks	LABOR	1	No	$400.00	$400.00
3	Materials for Requirement 9 2 Standing Pole Racks	MATERIALS	1	Yes	$675.00	$675.00
	REQUIREMENT 10					
4	Requirement: Provide and install ladder rack between two racks, as labeled in drawin One long piece running 11feet and on short piece		1	No	$0.00	$0.00
5	15 ladder racks with connections	LABOR	1	No	$600.00	$600.00
6	Material Required for Requirement 10	MATERIALS	1	Yes	$300.00	$300.00
	REQUIREMENT 11					
7	Provide and install ~300ft of 12 strand MM fiber optic cable		1	No	$0.00	$0.00
8	Note: Need specification such as 50/125 or 62.5/125 micron		1	No	$0.00	$0.00
9	Installation of Fiber Optic Cable	LABOR	1	No	$600.00	$600.00
10	Material Required for Requirement 11	MATERIALS	1	Yes	$1,250.00	$1,250.00
	REQUIREMENT 12					
11	Terminate fiber optic cable with LC connectors in rack mount enclosures times 2		1	No	$0.00	$0.00
12	CORNING 19" 1U EMPTY-ACCEPTS 2 PANELS CASSETTES OR MODULES	CCH-01U	1	Yes	$197.00	$197.00
13	CORNING 3 PORT PANEL LC DUPLEX LOADED 50/125 10G FOR CCH ENCLOSURE WITH CERAMIC INSERTS	CCH-CP06-E4	4	Yes	$45.88	$183.52
14	CORNING LC CONNECTOR 50/125 10G CER PRE-POLISHED STUB, CTS COMPTBL SENIOR,	95-050-99-X	30	Yes	$14.38	$431.40
15	Installation of Requirement 12 Included	LABOR	1	No	$0.00	$0.00
	REQUIREMENT 13					
16	Provide and install Cat6 cabling for 106 drops, around 8000 feet. Building measures 26 x 64		1	No	$0.00	$0.00
17	Installation of Requirement 13	LABOR	1	No	$12,130.00	$12,130.00
18	Material Required for Requirement 13	MATERIALS	1	Yes	$7,420.00	$7,420.00
	REQUIREMENT 14					
19	Terminate all cabling at rack and wall. Included Line 7	LABOR	1	No	$0.00	$0.00
	REQUIREMENT 15					
20	Provide all material: cable, jacks, patch panels, face plates and appropriate wire management material Included Line 7		1	No	$0.00	$0.00
	REQUIREMENT 16					

21	Provide all necessary labor Included Line 7	1	No	$0.00	$0.00

Subtotal:	$24,186.92
Tax (8.000%):	$836.55
Shipping:	$0.00
Total:	**$25,023.47**

Thank you. We value your business and will continue to provide you excellent service in addition to our comprehensive product line.

COUNCIL AGENDA REPORT
City of Brawley

Meeting Date: 04/02/2013
City Manager:

FROM: Prepared By: Pete Sanchez, Maintenance Shop Supervisor

Presented by: Yazmin Arellano, Public Works Director

SUBJECT: Purchase of Dump Truck, Tractor Loader and Telehandler using the National Joint Powers Alliance Purchasing Contract #77-377.

CITY MANAGER RECOMMENDATION: Approve the purchase of a Dump Truck, Tractor Loader and Telehandler for the Wastewater Treatment Plant using the National Joint Powers Alliance Purchasing Contract #77-377 in the amount of $315,925.01

DISCUSSION: The Wastewater Treatment Division is requesting to purchase a Dump Truck, Tractor Loader and Telehander for the Wastewater Treatment Plant. In preparing the bid documents, City staff identified the National Joint Powers Alliance Purchasing (NJPA) Contract.

On an annual or biannual basis, the NJPA procures various types of equipment and supplies for members of its organization. As a public agency, the City of Brawley is a member of NJPA. This Contract allows the City of Brawley an opportunity to purchase different types of equipment at a cost savings of 30%.

Dump Truck	$ 87,680.58
Tractor Loader	$ 81,625.00
Telehandler	$146,619.43
	$315,925.01

FISCAL IMPACT: $315,925.01 from Wastewater Enterprise Fund, 2012/2013 Fiscal Year.

ATTACHMENTS: Quotes from Contract Vendors for the NJPA Purchasing Contract.

National Auto Fleet Group

A Division of Chevrolet of Watsonville

490 Auto Center Drive, Watsonville, CA 95076

(855) BUY-NJPA • (626) 457-5590

(855) 289-6572 • (831) 480-8497 Fax

March 12, 2013

Pete Sanchez
City of Brawley

RE: Vehicle Proposal
NJPA Program

Dear Pete:

National Auto Fleet Group is pleased to offer the following proposal for Your review and consideration:

2013 Ford F650 Truck w/ Dump Body
(Per attached specifications)

Selling Price…..$	81,176.00
8.00 % Sales Tax…..$	6,494.08
Tire Tax…..$	10.50
Your Cost…..$	87,680.58

FOB: Your Destination Delivery: 90to 180 Days ARO

If you have any questions please give me a call at (626) 457-5590, or email me at mladner@earthlink.net Thank-you for the opportunity and I look forward to hearing from you soon.

Sincerely,
National Auto Fleet Group

Mike Ladner
Account Manager

CHEVROLET Ford NISSAN TOYOTA

Prepared For:

Prepared By:

Mike Ladner
Wondries Fleet Group
400 South Atlantic Blvd
Alhambra, California, 91801
Phone: 626 457-5590
Fax: 626 457-5593

Standard Equipment

2013 Ford F-650

Regular Cab XL (F6F)

Powertrain
Cummins 6.7L I-6 OHV diesel injection 24 valve intercooled turbo diesel engine * 185 amp alternator * 1,250 amp (total) 93 amp hours (Ah) (total) step battery dual batteries located forward right * 6-speed automatic transmission with overdrive * Rear-wheel drive * Single speed drive axle * Aluminized steel exhaust * Heated fuel/water separator * Transmission PTO provision * Standard rear differential * Right mounted horizontal muffler * Right mounted horizontal tailpipe * 45.0 gal. rectangular left front fuel tank.

Steering and Suspension
Hydraulic power-assist re-circulating ball steering * Hydraulic disc brakes with front and rear vented discs * Non-independent front suspension * Front leaf suspension * Front tapered leaf springs * Rigid rear axle * Rear leaf suspension * Rear multi-leaf springs * Front and rear 22.5" x 7.50" * 11.0R22.5 AS * Rubber auxiliary rear springs * Front and rear white steel disc wheels with 10 wheel studs

Safety
4-wheel anti-lock braking system

Comfort and Convenience
Air conditioning * AM/FM stereo, clock, seek-scan, 2 speakers, fixed antenna * Cruise control with steering wheel controls * 2 12V DC power outlets, ashtray, front lighter element(s) location, dual electric horn * Analog instrumentation display includes tachometer, oil pressure gauge, engine temperature gauge, trip computer, trip odometer * Warning indicators include battery, lights on, key, service interval, brake fluid, transmission fluid temp * Steering wheel with tilt adjustment * Manual front windows with light tint * Variable intermittent front windshield wipers * Passenger side vanity mirror * Interior lights include dome light with delay * Glove box, front cupholder, instrument panel bin, dashboard storage * Automatic gearshift steering column lever

Seating and Interior
Seating capacity of 3 * Vinyl faced front seats with carpet back material * Full cloth headliner, full vinyl/rubber floor covering, plastic/rubber gear shift knob * Driver and passenger seats with folding back * 4 way driver bucket seat with high back, fore/aft * 2 way passenger two person bench seat with mid back * Driver and passenger fixed headrests

Exterior Features
Front splash guards, composite/galvanized steel body material, side steps * Black side window moldings, black front windshield molding, black rear window molding * Black door handles * Chrome grille * 2 doors * Driver and passenger manual stainless steel west coast outside mirrors * Front chrome bumper with straight ends * Sealed beam halogen headlamps * Additional exterior lights include cab clearance lights * Clearcoat monotone paint * Hood mounted grille

Warranty

Prices and content availability as shown are subject to change and should be treated as estimates only. Actual base vehicle, package and option pricing may vary from this estimate because of special local pricing, availability or pricing adjustments not reflected in the dealer's computer system. See salesperson for the most current information.
Reference CT05209849 9/20/2012

Printed on March 12, 2013 at 09:03
Price Level: 315 QuoteID: <None>

Warranty (Continued)

Basic	24 month/unlimited mileage	Corrosion Perforation	60 month/unlimited mileage
Roadside Assistance	24 month/unlimited mileage	Diesel Engine	24 month/unlimited mileage
Transmission	36 month/unlimited mileage		

Dimensions and Capacities

Output	200 hp @ 2,300 rpm	Torque	520 lb -ft @ 1,600 rpm
1st gear ratio	3 510	2nd gear ratio	1 900
3rd gear ratio	1 440	4th gear ratio	1 000
5th gear ratio	0 740	6th gear ratio	0.640
Reverse gear ratio	5 090	Curb weight	9,590 lbs
Front curb weight	5,482 lbs.	Rear curb weight	4,108 lbs
Front axle capacity	8,500 lbs	Rear axle capacity	17,500 lbs
Front spring rating	8,500 lbs.	Rear spring rating	18,500 lbs.
Front tire/wheel capacity	12,360 lbs	Rear tire/wheel capacity	23,360 lbs.
Front legroom	40 7 "	Front headroom	41 3 "
Front hiproom	67 4 "	Front shoulder room	68.0 "
Length	308 0 "	Body width	96 7 "
Body height	92 9 "	Wheelbase	194 0 "
Cab to axle	120 0 "	Axle to end of frame	75.0 "
Radiator area	717 0 "	Frame rail depth	10 1 "
Frame rail width	3 1 "	Frame rail thickness	0.31 "
Max RBM (in -lbs)	665,500 0	Frame rail section	9 5 "
Turning radius (to curb)	27 5 '	Turning radius (to bumper)	28.9 '
Front frame height loaded	33 6 "	Front frame height unloaded	36 3 "
Rear frame height loaded	35 2 "	Rear frame height unloaded	39.1 "

Prices and content availability as shown are subject to change and should be treated as estimates only. Actual base vehicle, package and option pricing may vary from this estimate because of special local pricing, availability or pricing adjustments not reflected in the dealer's computer system. See salesperson for the most current information. Reference CT05209649 9/26/2012

Prepared For:

Prepared By

Mike Ladner
Wondries Fleet Group
400 South Atlantic Blvd
Alhambra, California, 91801
Phone. 626 457-5590
Fax: 626 457-5593

Selected Options

2013 Ford F-650

Regular Cab XL (F6F)

Vehicle Snapshot

Engine: Cummins (6 7L) ISB 250 HP @ 2300 RPM, Governed @ 2600 RPM
Transmission: Allison 3500 5-Speed, RDS Series On-Off
Rear Axle Ratio: 5.29
Brakes: Air Brakes - Straight Truck w/16.5x7.0 Rear Pads - 22.5" Wheels w/Traction Control
GVWR: 25,999 lbs

Code	Description	Class	
F6F	**Base Vehicle Price (F6F)**	STD	64,725.00
Engine/Engine Equipment			
99J	**Cummins (6.7L) ISB 250 HP @ 2300 RPM, Governed @ 2600 RPM** *Starting Motor - 12-Volt, 38 MT, Delco-Remy America Inc Type 300. Less thermal overcrank protection.; Radiator - Modine. 717 Sq In Cross Flow, 4 25" Core w/In-Tank Trans Cooler: Mainshaft Driveline, 1710. Includes Borg Warner SA75 viscous screw on type fan clutch. Includes Donaldson single stage dry type air cleaner with restriction indicator. Includes Fleetguard FS19557, with electric type heater and primer pump - engine mounted fuel/water separator. 660 lb-ft torque @ 1600 RPM. 2600 RPM governed speed. 250 peak HP (Max). Component-manufacturer warranty applies. Subject to change by manufacturer without notice. Torque. 660 ft lbs @ 1600 rpm*	OPT	2,744.00
631	**CARB Clean Idle Label on Hood - Required for registration in CA, CT, DE, GA, ME, NJ, NY, NC, and PA**	OPT	N/C
425	**50 State Emissions**	OPT	N/C
Allison Vocational Transmission			
44L	**Allison 3500 5-Speed, RDS Series On-Off** *RDS Series On-Off, Synthetic Transmission Oil, 29 thru 42 Pints - Meets Allison TES295 Specification. Rated: wide ratio, 300 HP input power, 800 lb-ft input torque, and 2 year model warranty. PTO provision standard. Includes oil level sensor.*	OPT	5,030.00
Allison Programming I/O			
94B	**Allison Programming I/O Rugged Duty Series - General Purpose/Construction** *For programming content specific, please refer to HELP or RESOURCES in CTT.*	OPT	N/C

Prices and content availability as shown are subject to change and should be treated as estimates only. Actual base vehicle package and option pricing may vary from this estimate because of special local pricing, availability or pricing adjustments not reflected in the dealer's computer system. See salesperson for the most current information. Reference CT05209849 9/26/2012

Code	Description	Class	
Brakes/Brake Equipment			
157	**Trailer Connection Socket - 7-Way, Wired for Turn Signals Independent of Stop** *Mounted at rear of frame, compatible with trailers that have amber or side turn lamps with independent stop/turn.*	OPT	98.00
67D	**Air Brakes - Straight Truck w/16.5x7.0 Rear Pads - 22.5" Wheels w/Traction Control** *Air Compressor, Cummins. 18.7 CFM Capacity. System Control in Overhead Gauge / Switch Pod. Meritor Q-Plus with ABS, Bendix Anti-Lock Brake System, 4-channel. Includes 15" x 4" front brakes, dual direct reading air pressure gauges, front and rear dust shields, brake lines color coded nylon, instrument panel mounted yellow knob parking brake control valve, automatic slack adjusters front and rear, two rear spring parking brake chambers mounted on front of rear axle, three drain valve(s) and two air tanks (Reference Body Builders Book for location). Rear brake size and components dependent upon axle selection. Uses existing ABS system to minimize wheel slipping during acceleration. Usage determined by the air brake package selected.*	OPT	1,646.00
62R	**Drain Valve - Automatic, MAY RESTRICT FUEL TANKS, Bendix DV-2 w/Heater** *Available with air tanks*	OPT	195.00
Axle, Front/Suspension, Front			
43N	**10,000 lb. Cap. Non-Driving - Dana E-1002IF** *Steering Wheel - Two Spoke, Black PVC, 17.5" Dia. Includes Ross TAS-40 integral power steering. WARNING! The selection of this Axle may cause the GVWR to exceed 26,000 lbs. with CDL implications.*	OPT	683.00
61C	**Taper-Leaf Springs, Parabolic - 10,000 lb. Cap** *Includes shock absorbers.*	OPT	122.00
Axle, Rear/Suspension, Rear			
X5B	**5.29 Axle Ratio**	OPT	N/C
47L	**19,000 lb. Single-Speed - Dana S17-140** *Single reduction with Gentech Quiet Gears, synthetic lube and 190 wheel ends. NOTE: When specifying an axle ratio, check performance guidelines for startability and gradeability. WARNING! The selection of this Axle may cause the GVWR to exceed 26,000 lbs., with CDL implications.*	OPT	834.00
68P	**Multi-Leaf Springs - Vari-Rate Suspension 20,000 lb. Cap** *Includes 4500 lb. auxiliary rubber spring*	OPT	110.00
Front Wheels/Tires			
643	**Wheels, Front 22.5x8.25 Powder Coated Steel Disc, 10-Hole** *(285.75MM BC) hub piloted, flanged nut, metric mount, 8.25 DC rims, with steel hubs, white*	OPT	24.00
TCT	**Tires, Front Two 11R22.5G Goodyear G661 HSA (497 rev/mile)**	STD	N/C
Rear Wheels/Tires			
663	**Wheels, Rear 22.5x8.25 Powder Coated Steel Disc, 10-Hole** *(285.75MM BC) hub piloted, flanged nut, metric mount, 8.25 DC rims, with steel hubs, white*	OPT	49.00
RCT	**Tires, Rear Four 11R22.5G Goodyear G661 HSA (497 rev/mile)**	STD	N/C
Wheelbase			

Prices and content availability as shown, are subject to change and should be treated as estimates only. Actual base vehicle, package and option pricing may vary from this estimate because of special local pricing, availability or pricing adjustments not reflected in the dealer's computer system. See salesperson for the most current information.
Reference CT05209849 9/26/2012

Code	Description	Class	
	158" Wheelbase/84" CA/49" AF/246" OAL	OPT	N/C
Frame			
20Y	**Special Rating GVWR - Limited to 25,999 lb. GVWR**	OPT	61.00
536	**Single Channel - Straight 'C' 14.18 SM, 120,000 PSI** *Heat treated alloy steel, 10.125" x 3.580" x 0.312" (257.2mm x 90.9mm x 8.0mm), 437.9" (11122mm) maximum OAL. Includes tapered ends when used with tractor air brake system*	OPT	732.00
Exhaust			
91E	**Under Cab, Left Side Outlet - N/A with all Hydraulic Brakes** *Single, horizontal diesel particulate filter assembly, frame mounted outside right rail under cab, single horizontal SCR assembly, frame mounted outside right rail under cab, horizontal tail pipe left side outlet*	OPT	N/C
Fuel Tanks			
86K	**5 Gallon Urea Tank** *Mounted L/H rail under cab*	OPT	(49.00)
	10 Gal. Single Tank Fuel Fill. Mandatory Charge Applied, Based On Tank Selection	OPT	0.00
65S	**Tank - Steel (Deep) 50 U.S. gal. (189 L.) - Single** *LH D-style steel, top draw, 16" tank depth, mounted left side under cab in front of battery box. Includes under cab mounted exhaust system*	OPT	213.00
Electrical/Alternator/Battery			
63B	**Two - 900 CCA, 1800 Total, Includes Steel Battery Box and Plastic Lid** *12Volt. Motorcraft*	OPT	61.00
17B	**185 Amp, Leece-Neville 12-Volt, Brushless, Pad Mounted, Alternator**	STD	N/C
Seats			
88R	**Driver, Bucket Seat, 30%, Reclining, Steel Gray Cloth w/Steel Gray Cloth Insert** *Fixed track with fore aft adjust, high back with integral headrest and single armrest, inboard. Seats are color coordinated to cab trim level. All seats include seat belts.*	OPT	73.00
85T	**2 Passenger, 70% Bench, Folding, Steel Gray Cloth w/Steel Gray Cloth Insert** *Intermediate folding back, integral outboard headrest, fold down single armrest, inboard, with cupholders.*	OPT	61.00
Cab Equipment			
16V	**Voltmeter** *System Control in Overhead Gauge / Switch Pod. Located in overhead pod.*	OPT	98.00
680A	**XL Trim Package** *(88H) Driver, Bucket Seat, 30%, Reclining, Steel Gray Vinyl w/Steel Gray Vinyl Insert. Fixed track with fore aft adjust, high back with integral headrest and single armrest, inboard. Seats are color coordinated to cab trim level. All seats include seat belts. (85A) 2 Passenger, 70% Bench, Folding, Steel Gray Vinyl w/Steel Gray Vinyl Insert. Intermediate folding back, integral outboard headrest, fold down single armrest, inboard, with cupholders. Includes molded cloth headliner, RH and LH coat hooks, sunvisors with passenger side mirror, interior back panel painted body color, door trim*	OPT	N/C

Prices and content availability as shown are subject to change and should be treated as estimates only. Actual base vehicle, package and option pricing may vary from this estimate because of special local pricing, availability or pricing adjustments not reflected in the dealer's computer system. See salesperson for the most current information.
Reference CT05209849 9/26/2012

Code	Description	Class	
	panels with std armrest, manual air conditioning, West Coast mirrors, bright front headlight bezel, chrome grille and chrome front bumper. Steel gray interior color.		
54A	**Mirrors, Dual Stainless Steel - Rectangular, 7 1/2" x 16 1/2"** *West Coast style, 102" wide spacing*	STD	N/C
54C	**Mirrors, 2 Auxiliary Convex - Stainless Steel** *8" dia., mounted below primary mirrors*	OPT	43.00
588	**Radio AM/FM Stereo w/Clock & MP3**	STD	N/C
Miscellaneous			
B4A	**Net Invoice Fleet Option**	OPT	0.00
Interior Colors For : Primary			
E	**Gray**	OPT	N/C
Primary Colors For : Primary			
YZ	**Oxford White**	OPT	N/C

Vehicle Subtotal	$77,553.00
Destination	$1,495.00
Vehicle Subtotal (including Destination)	**$79,048.00**

Prices and content availability as shown are subject to change and should be treated as estimates only. Actual base vehicle, package and option pricing may vary from this estimate because of special local pricing, availability or pricing adjustments not reflected in the dealer's computer system. See salesperson for the most current information.
Reference CT05209949 9/26/2012

Prepared For:

Prepared By

Mike Ladner
Wondries Fleet Group
400 South Atlantic Blvd
Alhambra, California, 91801
Phone: 626 457 5590
Fax: 626 457 5593

Dimensions & Capacities

2013 Ford F-650

Regular Cab XL (F6F)

Description	Value
Dimensions and Capacities	
Output	250 hp @ 2,300 rpm
Torque	660 lb-ft @ 1,600 rpm
1st gear ratio	4.590
2nd gear ratio	2.250
3rd gear ratio	1.540
4th gear ratio	1.000
5th gear ratio	0.750
Reverse gear ratio	5.000
Curb weight	10,123 lbs
Front curb weight	6,102 lbs
Rear curb weight	4,021 lbs
Front axle capacity	10,000 lbs
Rear axle capacity	19,000 lbs
Front spring rating	10,000 lbs.
Rear spring rating	20,000 lbs
Front tire/wheel capacity	12,350 lbs.
Rear tire/wheel capacity	23,360 lbs
Front legroom	40.7"
Front headroom	41.3"
Front hiproom	67.4"
Front shoulder room	68.0"
Length	246.0"
Body width	96.7"
Body height	92.9"
Wheelbase	158.0"
Cab to axle	84.0"
Axle to end of frame	49.0"
Radiator area	717.0"
Frame rail depth	10.1"
Frame rail width	3.6"
Frame rail thickness	0.31"
Max RBM (in.-lbs.)	1,780,800.0
Frame rail section	9.5"
Turning radius (to curb)	23.0'
Turning radius (to bumper)	24.3'

Prices and content availability as shown are subject to change and should be treated as estimates only. Actual base vehicle, package and option pricing may vary from this estimate because of special local pricing, availability or pricing adjustments not reflected in the dealer's computer system. See salesperson for the most current information.
Reference CT05209849 9/26/2012

Description	Value
Dimensions and Capacities	
Front frame height loaded	34.7 "
Front frame height unloaded	37.6 "
Rear frame height loaded	35.5 "
Rear frame height unloaded	39.4 "

Prices and content availability as shown, are subject to change and should be treated as estimates only. Actual base vehicle, package and option pricing may vary from this estimate because of special local pricing, availability or pricing adjustments not reflected in the dealer's computer system. See salesperson for the most current information.
Reference CT05209848 9/26/2012

Prepared For

Prepared By

Mike Ladner
Wondries Fleet Group
400 South Atlantic Blvd
Alhambra, California, 91801
Phone: 626 457-5590
Fax: 626 457-5593

Warranty

2013 Ford F-650

Regular Cab XL (F6F)

Description	Months/Distance
Basic	24 month/unlimited mileage
Corrosion Perforation	60 month/unlimited mileage
Roadside Assistance	24 month/unlimited mileage
Diesel Engine	24 month/unlimited mileage
Transmission	24 month/unlimited mileage

Prices and content availability as shown are subject to change and should be treated as estimates only. Actual sale vehicle, package and option pricing may vary from this estimate because of special local pricing, availability or pricing adjustments not reflected in the dealer's computer system. See salesperson for the most current information.
Reference CT05209849 3/28/2012

Prepared For:

Prepared By:

Mike Ladner
Wondries Fleet Group
400 South Atlantic Blvd
Alhambra, California, 91801
Phone: 626 457-5590
Fax: 626 457-5593

Performance Tests

2013 Ford F-650

Regular Cab XL (F6F)

Performance predictions in this report represent an estimate of vehicle performance based on standard operating conditions. Variations in customer equipment, load configuration, ambient conditions, and/or operator driving techniques can cause significant variations in vehicle performance. These values are not representative of results that may be shown in actual dynamometer tests. This report should therefore be used as a guide for comparative vehicle performance.

Performance Start Tests	Calculated	Desired
Start grade capability in gear 1	37.0 %	15.0 %
Start grade capability in reverse	40.3 %	15.0 %

Performance Grade Tests	Calculated	Desired
Maximum grade in gear 2	14.0 %	3.0 %
Maximum grade in gear 3	9.6 %	3.0 %
Maximum grade in gear 4	6.2 %	3.0 %
Maximum grade in gear 5	4.7 %	3.0 %

Performance Speed Tests

Given your requirement to go 75 mph, you need a maximum axle ratio of 5.58.
Given your requirement to go 55 mph at a grade of 3.0%, you need a minimum of 165 hp.
The calculated cruise speed is 70 mph, your desired cruise speed is 60 mph.
The engine RPM at 60 mph cruise speed is 1,972 rpm.

Performance Tests Variables in Use

Rear axle ratio:	5.29	Worst road surface	Typical Highway
Gear 1 ratio:	4.59	Final Drive Ratio	0.75
Gear reverse ratio:	5.00	Rear axle ratio:	5.29
Tire size:	11R22.5 (497rev/mile)	Drag Coefficient	0.80
Gross vehicle weight (GVW):	26,999 lbs		
Clutch engagement torque:	350 ft lbs		
Torque conversion ratio:	2.4		
Gear 2 ratio:	2.25		
Gear 3 ratio:	1.54		
Gear 4 ratio:	1.00		
Gear 5 ratio:	0.75		
Peak engine torque:	660 ft lbs		
Engine Power:	250 hp @ 2,300 rpm		
Governed RPM:	2,600 rpm		
Frontal Area:	56.3 Sq.Ft		
Cruising RPM:	2,300 rpm		

Prices and content availability as shown are subject to change and should be treated as estimates only. Actual base vehicle, package and option pricing may vary from this estimate because of special local pricing, availability or pricing adjustments not reflected in the dealer's computer system. See salesperson for the most current information.
Reference CT05209849 9/26/2012

Performance Weight Tests

Variables	Front Axle	Rear Axle	Totals
Chassis	5,821 lbs	3,910 lbs	9,731 lbs
Body	0 lbs	0 lbs	0 lbs
Occupants	300 lbs	150 lbs	450 lbs
Fuel	233 lbs	117 lbs	350 lbs
1 Max Payload	2,868 lbs	12,285 lbs	15,153 lbs
TOTAL	9,199 lbs	16,450 lbs	25,999 lbs

Weights

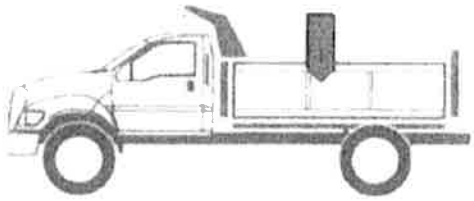

Ratings			GVWR
GAWR	10,000 lbs	19,000 lbs	25,999 lbs
Wheels/Tires	12,350 lbs	23,360 lbs	
Suspension	10,000 lbs	20,000 lbs	
Axle	10,000 lbs	19,000 lbs	
Legal Limit	0 lbs	0 lbs	

Weight Summary	Calculated	GAWR	Legal Limits
Front axle load is	9,199 lbs	10,000 lbs	0 lbs
Rear axle load is	16,450 lbs	19,000 lbs	0 lbs

Selected Options that limit GVWR:

20Y Special Rating GVWR - Limited to 25,999 lb GVWR	25,999.00
44L Allison 3500 5-Speed, RDS Series On-Off	80,000.00

Prices and content availability as shown are subject to change and should be treated as estimates only. Actual base vehicle, package and option pricing may vary from this estimate because of special local pricing, availability or pricing adjustments not reflected in the dealer's computer system. See salesperson for the most current information.
Reference CT06209649 9/26/2012

Shift Chart

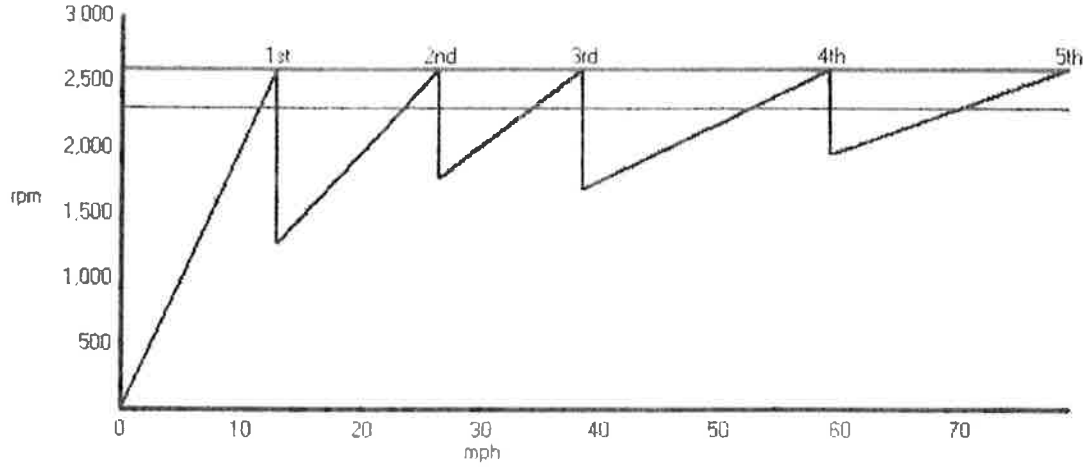

Prices and content availability as shown are subject to change and should be treated as estimates only. Actual base vehicle, package and option pricing may vary from this estimate because of special local pricing, availability or pricing adjustments not reflected in the dealer's computer system. See salesperson for the most current information.
Reference CT05209849 9/26/2012

JOHN DEERE

JOHN DEERE
CONFIDENTIAL

Pete Sanchez
City of Brawley
400 Main Street
Brawley, CA 92227

March 01, 2013

Quote Number 139163 : Landscape Loader 210K, NJPA Contract 060311-JDC.

All the prices in the detailed sections are Per machine basis.

Machine Configuration

Code	Description	Qty	Unit Price
7011T8	210K TRACTOR LOADER	1	$82,170.00
2085	CAB WITH HEAT & A/C	1	$15,398.00
2212	SEAT,SUSPENSION W/3"SEATBELT	1	$0.01
3085	3085 AXLE GP-MFWD	1	In Base
5310	2FUNC LOADER/5 FUNC REAR VAL	1	$1,403.00
7006	7006 BATTERY GP-DUAL	1	$258.00
7635	7635 BUCKET OPTION-1.12YD	1	$2,944.00
8080	FIXED DRAWBARW	1	$215.00
8095	ANTI THEFT	1	$384.00
8100	WHEEL WEIGHTS	1	$1,702.00
8115	MFWD DRIVE LINE GUARD	1	$304.00
8120	SCRAPER, 284 BOX BLADE	1	$4,762.00
8160	TRANSMISSION GUARD	1	$370.00
8340	TILT STEERING GP	1	$400.00
	Total		**$110,310.01**
	Discount (30%)		**$33,093.00**
	Net Price		**$77,217.01**

Custom Jobs

Code	Description	Qty	Price
	Dealer Provide Freight from Phoenix, AZ to Imperial, CA	1	$1,375.00
		Total	**$1,375.00**

Quote Summary - Landscape Loader 210K (per unit)	
Item Description	**Prices**
Machine Net Price	$77,217.01
Custom Jobs	$1,375.00

Price per Machine	$78,592.01

Destination	Freight Charge
Brawley,CA	$2,625.00

Total Net Price (Quantity = 1) **$81,217.01**

Warranty Terms
210K includes Standard Warranty of 12 months.

Remarks:
Please note that this quote is valid for 30 days.

Contact Richard Murga; Phone 309-765-0260, Fax 309-765-3358; Email: MurgaRichard@JohnDeere.com -- PO must be made out to : John Deere Construction Retail Sales, 1515 Fifth Ave., Moline, IL 61265

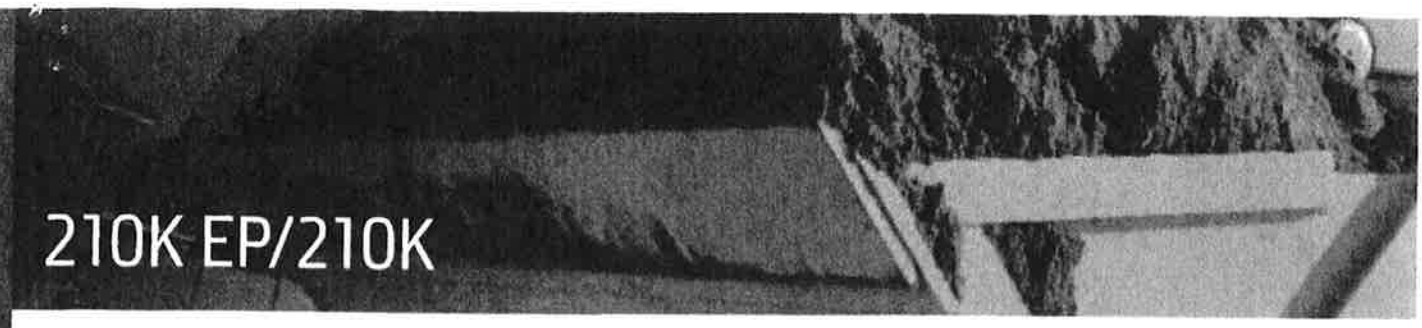

210K EP/210K

Engine	210K EP		210K	
Manufacturer and Model	John Deere PowerTech™ E 4045HT072 turbo-charged, standard		John Deere PowerTech E 4045HT073 turbo-charged, standard	
Non-Road Emissions Standard	EPA Interim Tier 4/EU Stage IIIB		EPA Interim Tier 4/EU Stage IIIB	
Displacement	4.5 L (276 cu. in.)		4.5 L (276 cu. in.)	
Net Peak Power (ISO 9249)	52 kW (70 hp) at 2,000 rpm		66 kW (88 hp) at 2,000 rpm	
Net Peak Torque (ISO 9249)	315 Nm (232 lb.-ft.) at 1,300 rpm		375 Nm (277 lb.-ft.) at 1,400 rpm	
Net Torque Rise	44%		39%	
Lubrication	Pressure system with spin-on filter and cooler		Pressure system with spin-on filter and cooler	
Air Cleaner	Dual-stage dry type with safety element and evacuator valve			
Cooling				
Fan Type	Suction type		Electronically controlled, variable-rate suction type	
Engine Coolant Rating	-37 deg. C (-34 deg. F)		-37 deg. C (-34 deg. F)	
Engine Oil Cooler	Oil to water		Oil to water	
Powertrain				
Transmission	4 speed, helical-cut gears, full PowerShift™ transmission with hydraulic reverser standard; electric clutch cutoff on loader lever			
Torque Converter	Single stage, dual phase with 2.63:1 stall ratio, 280 mm (11 in.)			
Maximum Travel Speeds Measured with 16.9L-24 Rear Tires	*Forward*	*Reverse*	*Forward*	*Reverse*
Gear 1	5.1 km/h (3.2 mph)	6.4 km/h (4.0 mph)	5.1 km/h (3.2 mph)	6.4 km/h (4.0 mph)
Gear 2	9.5 km/h (5.9 mph)	11.9 km/h (7.4 mph)	9.5 km/h (5.9 mph)	11.9 km/h (7.4 mph)
Gear 3	19.3 km/h (12.0 mph)	—	19.5 km/h (12.1 mph)	—
Gear 4	31.2 km/h (19.4 mph)	—	32.3 km/h (20.0 mph)	—
Axles				
Axle Oscillation, Stop to Stop, Front Axle	22 deg.		22 deg.	
Axle Ratings	*Mechanical-Front-Wheel Drive (MFWD)*	*Rear*	*Mechanical-Front-Wheel Drive (MFWD)*	*Rear*
Static	12 000 kg (26,455 lb.)	13 000 kg (28,660 lb.)	12 000 kg (26,455 lb.)	13 000 kg (28,660 lb.)
Dynamic	6000 kg (13,228 lb.)	7000 kg (15,432 lb.)	6000 kg (13,228 lb.)	7000 kg (15,432 lb.)
Ultimate	28 200 kg (62,170 lb.)	30 600 kg (67,461 lb.)	28 200 kg (62,170 lb.)	30 600 kg (67,461 lb.)
Steering	Hydrostatic power (SAE J1151) and emergency (ISO5010)			
Axle	*MFWD*		*MFWD*	
Curb-Turning Radius				
With Brakes	2.59 m (8 ft. 6 in.)		2.59 m (8 ft. 6 in.)	
Without Brakes	3.96 m (13 ft. 0 in.)		3.96 m (13 ft. 0 in.)	
Bucket Clearance Circle				
With Brakes	9.55 m (31 ft. 4 in.)		9.55 m (31 ft. 4 in.)	
Without Brakes	10.67 m (35 ft. 0 in.)		10.67 m (35 ft. 0 in.)	
Steering Wheel Turns (lock to lock)	2.8		2.8	
Final Drive, Mechanical-Front Wheel and Rear Axle	Heavy duty, outboard planetary final drives distribute shock loads over 3 gears			
Brakes (SAE J1473)				
Service	Power assisted, hydraulic wet disc, mounted inboard, self-adjusting and self-equalizing			
Parking	Spring applied, hydraulically released, wet multi-disc, independent of service brakes with electric switch control			

Hydraulics	210K EP	210K
Main Pump	Open-center, single-gear pump, integral priority valve	
Pump Flow, Hitch and Loader, at 2,250 rpm	78 L/m (20.5 gpm)	96 L/m (25.3 gpm)
System Relief Pressure	18 961 kPa (2,750 psi)	18 961 kPa (2,750 psi)
Controls		
Hitch	4-lever, single-tilt cylinder standard, 5-lever dual-tilt cylinder (includes auxiliary) optional	
Loader	Single-lever loader/bucket control with electric clutch cutoff switch standard, separate lever loader auxiliary function and single-lever loader/auxiliary with metered roller switch for auxiliary optional	
Power-Takeoff (PTO) Performance	N/A	Dedicated hydrostatic system (pump, motor, and cooling package) suitable for continuous, heavy-duty PTO operations
Net Power (540 rpm maximum)	N/A	41 kW (55 hp)

Cylinders	210K EP / 210K		
Type	Heat-treated, chrome-plated, polished rods, hardened steel (replaceable bushings) pivot pins		
	Bore	*Rod Diameter*	*Stroke*
Loader Boom (2)	80.0 mm (3.15 in.)	50.0 mm (1.97 in.)	790.0 mm (31.10 in.)
Loader Bucket (1)	90.0 mm (3.54 in.)	50.0 mm (1.97 in.)	744.0 mm (29.29 in.)
Hitch			
Lift (1)	76.2 mm (3.00 in.)	50.8 mm (2.00 in.)	196.9 mm (7.75 in.)
Pitch (1)	63.5 mm (2.50 in.)	31.8 mm (1.25 in.)	171.5 mm (6.75 in.)
Tilt (1 or 2)	76.2 mm (3.00 in.)	50.8 mm (2.00 in.)	120.7 mm (4.75 in.)
MFWD (1)	67.0 mm (2.64 in.)	42.0 mm (1.65 in.)	210.0 mm (8.27 in.)

Electrical	210K EP	210K
Voltage	12 volt	12 volt
Alternator Rating	90 amp	120 amp
Lights	4 halogen: 2 front and 2 optional rear (32,500 candlepower each), turn signals and flashers: 2 front and 2 rear; stop and taillights; and 2 rear reflectors	

Operator Station	210K EP / 210K
Type (SAE J1040)	Canopy: solid mounted, ROPS/FOPS left access, with 2-post ROPS and steel roof; cab: isolation mounted, left access, with molded roof and standard heating, ventilation, and air conditioning (HVAC)
Seat Rotation	
Right	40 deg.
Left	10 deg

Tires/Wheels		
	Front	*Rear*
MFWD	12-16.5, 8 PR	16.9-24, 8 PR, R4

Serviceability	
Hydraulic Oil Filter, Spin-On Enclosed Replaceable Element	6-micron filtration; 1,000 break-in/service hours
Refill Capacities	
Cooling System	25 L (26 qt.)
Rear Axle	18 L (19 qt.)
Engine Oil (including vertical spin-on filter)	13 L (14 qt.)
Torque Converter and Transmission	15 L (16 qt.)
Fuel Tank (with ground-level fueling)	102.2 L (27 gal.)
Hydraulic System	89 L (23.6 gal.)
Hydraulic Reservoir	37 L (9.8 gal.)
MFWD Housing	
Axle	6.5 L (7 qt.)
Planetary (each)	1 L (1 qt.)

Operating Weights	210K EP	210K
With Full Fuel Tank, 79-kg (175 lb.) Operator, and Standard Equipment	4707 kg (10,379 lb.)	4959 kg (10,936 lb.)
Typical with Canopy, MFWD, Single Battery, 2x4 Valve, 0.86-m³ (1.125 cu. yd.) Loader Bucket, 454-kg (1,000 lb.) Wheel Weights, Deluxe Electrical, and 2134-mm (84 in.) Box Blade	6013 kg (13,259 lb.)	6266 kg (13,816 lb.)
Adjustments to Operating Weights with Optional Components		
Cab	363 kg (800 lb.)	363 kg (800 lb.)
Box Blade		
2.13-m (84 in.)	771 kg (1,700 lb.)	771 kg (1,700 lb.)
2.20-m (88 in.)	816 kg (1,800 lb.)	816 kg (1,800 lb.)
Wheel Weights	454 kg (1,000 lb.)	454 kg (1,000 lb.)
Hitch Weights	227 kg (500 lb.) / 363 kg (800 lb.)	227 kg (500 lb.) / 363 kg (800 lb.)
Front Loader Coupler	286 kg (630 lb.)	286 kg (630 lb.)

Overall Dimensions	210K EP / 210K
A Ground Clearance, Minimum	287 mm (11.3 in.)
B Overall Length, Transport (without box blade)	5.23 m (17 ft. 2 in.)
C Transport Height	
Canopy	2.54 m (8 ft. 4 in.)
Cab	2.64 m (8 ft. 8 in.)
D Length from Axle to Axle (MFWD axle)	2.12 m (6 ft. 11 in.)
E Width Over Tires	2.13 m (7 ft. 0 in.)

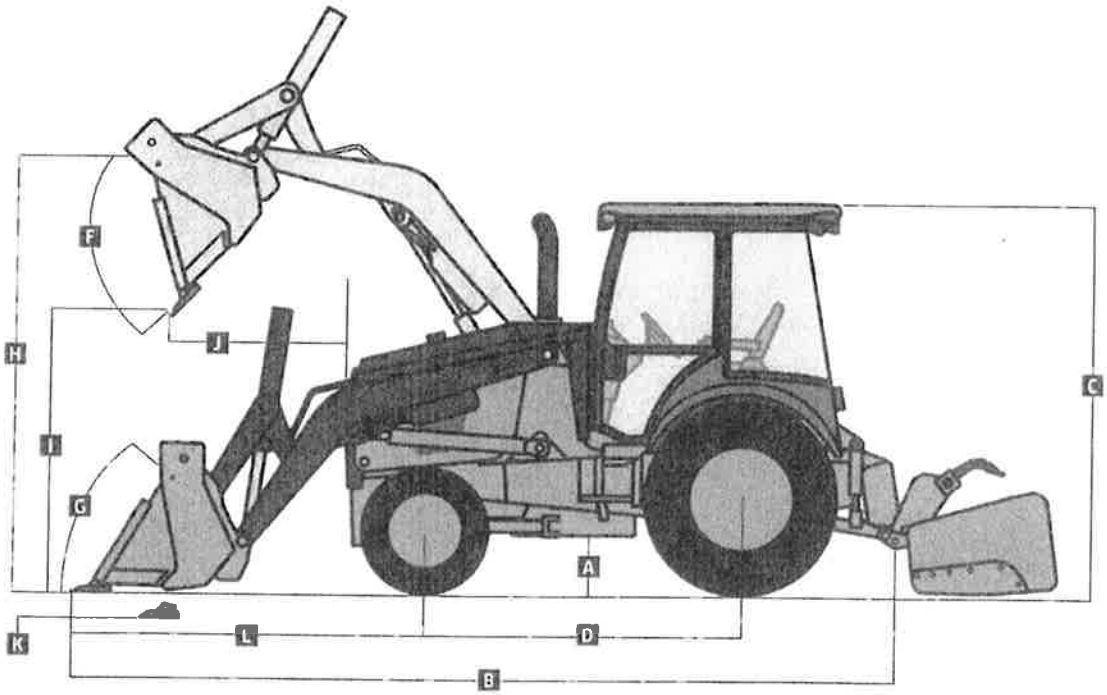

Loader Dimensions/Performance	210K EP / 210K		
F Bucket, Dump Angle, Maximum	45 deg		
G Rollback Angle at Ground Level	40 deg		
Bucket	*Heavy-Duty*	*Heavy-Duty Long Lip*	*Multipurpose*
Capacity	0.77 m (1.00 cu. yd.)	0.86 m (1.12 cu. yd.)	0.96 m (1.25 cu. yd.)
Width	2184 mm (86 in.)	2184 mm (86 in.)	2184 mm (86 in.)
Weight	322 kg (710 lb.)	427 kg (940 lb.)	658 kg (1,450 lb.)
Breakout Force (with wheel weights and box blade)	44.3 kN (9,953 lb.)	42.5 kN (9,553 lb.)	38.7 kN (8,700 lb.)
Lift Capacity, Full Height (with wheel weights and box blade)	2548 kg (5,612 lb.)	2466 kg (5,432 lb.)	2239 kg (4,932 lb.)
H Height to Bucket Hinge Pin, Maximum	3.34 m (10 ft. 11 in.)	3.34 m (10 ft. 11 in.)	3.34 m (10 ft. 11 in.)
I Dump Clearance, Bucket at 45 deg	2.67 m (8 ft. 9 in.)	2.67 m (8 ft. 9 in.)	2.67 m (8 ft. 9 in.)
J Reach at Full Height, Bucket at 45 deg.	914 mm (36 in.)	914 mm (36 in.)	914 mm (36 in.)
K Digging Depth Below Ground, Bucket Level	203 mm (8 in.)	203 mm (8 in.)	203 mm (8 in.)
L Length from Front Axle Centerline to Bucket Cutting Edge	2.03 m (6 ft. 8 in.)	2.03 m (6 ft. 8 in.)	2.15 m (7 ft. 1 in.)

Lift Capacity with Quick-Coupler/Forks		
Hydraulic Capacity	*1219-mm (48 in.) Tines*	*1524-mm (60 in.) Tines*
A Maximum Height	1400 kg (3,086 lb.)	1297 kg (2,860 lb.)
B Maximum Reach	2624 kg (5,786 lb.)	2486 kg (5,480 lb.)
C At Ground Line	3287 kg (7,247 lb.)	3102 kg (6,839 lb.)
D Below Ground Line	211 mm (8.3 in.)	211 mm (8.3 in.)

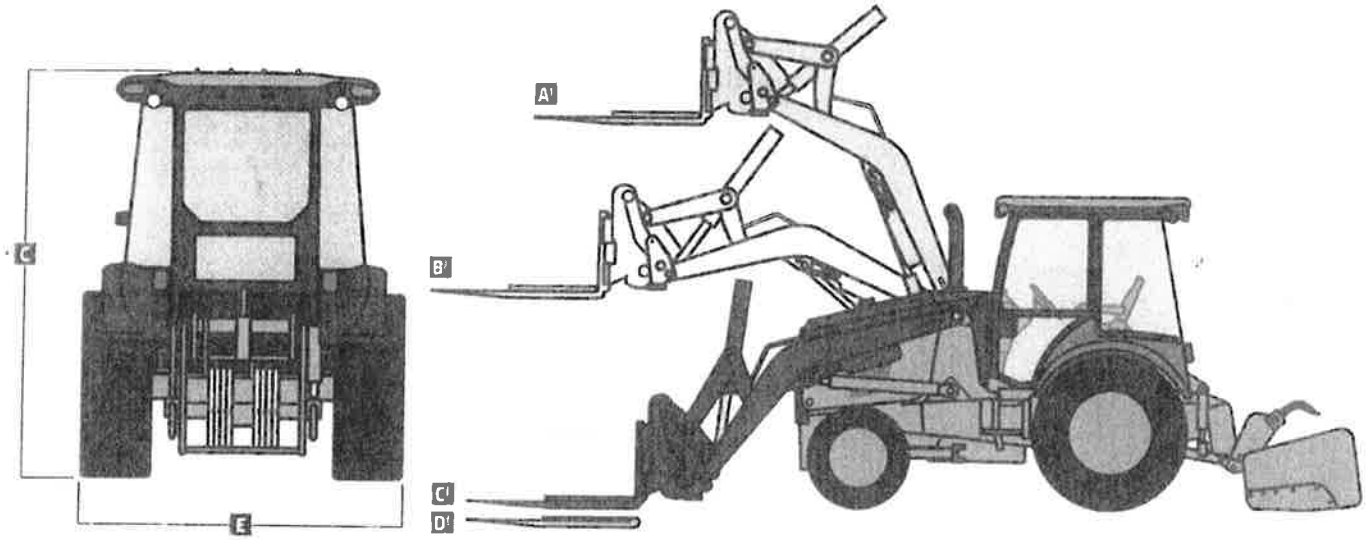

Additional equipment

Key: ● Standard ▲ Optional or special

See your John Deere dealer for further information.

210K EP	210K	Engine
●	●	Meets EPA Interim Tier 4/EU Stage IIIB emissions
●		John Deere Model 4045HT072 — 4.5L, 52 kW (70 hp) net peak power, turbocharged, isolation mounted
	●	John Deere Model 4045HT073 — 4.5L, 66 kW (88 hp) net peak power, turbocharged, isolation mounted
●	●	Vertical spin-on engine oil filter
●	●	Vertical spin-on fuel filter with water separator
●		Coolant recovery tank
	●	Coolant recovery tank with low-level indicator
●	●	Serpentine belt with automatic belt tensioner
●	●	Oil-to-water engine oil cooler
●	●	Antifreeze, –37 deg. C (–34 deg. F)
●	●	Dual-element dry-type air cleaner
●	●	Enclosed safety fan guard
●	●	Fold-out, hinged cooling system
●		Suction-type cooling fan
	●	Electronically controlled, variable-rate suction-type cooling fan
●	●	High ambient temperature engine cooling
●	●	Muffler, underhood with curved-end exhaust stack
	●	Self-cleaning exhaust aftertreatment system
▲		Ether starting aid
	●	Glow plugs
▲		Cold-start package
▲	▲	Electric engine coolant heater, 1,000 watts
●	●	Electronic fuel lift pump
		Powertrain
●	●	PowerShift Transmission: Torque converter with twist-grip Transmission Control Lever (TCL) and neutral safety switch interlock (1st through 4th gears)
●	●	Transmission oil cooler
●	●	Vertical spin-on transmission filter
●	●	Differential lock, electric foot actuated
●	●	Power-assisted hydraulic service brakes (conform to ISO 3450); inboard, wet multi-disc, self-adjusting and self-equalizing
●	●	Parking/emergency brake with electric switch control (conforms to ISO 3450) Spring applied, hydraulically released wet multi-disc, independent of service brakes
●	●	MFWD, standard differential, sealed axle
▲	▲	MFWD, limited slip, sealed axle
▲	▲	Transmission guard
▲	▲	MFWD driveshaft guard
		Category II 3-Point Hitch
●	●	Integral Category II
●	●	4th-function sectional hydraulic valve, 4th-function auxiliary with capped hoses
▲	▲	5th-function hitch valve with control lever, dual tilt cylinder

210K EP	210K	Loader
●	●	Hydraulic self-leveling
●	●	Return-to-dig feature
●	●	Bucket-level indicator
●	●	Single lever control with electric clutch cutoff switch
●	●	Loader boom service lock
▲	▲	Auxiliary loader hydraulics (3rd-function valve) with 2-lever control
▲	▲	Auxiliary loader hydraulics with single control lever with electrohydraulic auxiliary control (MFWD and clutch disconnect)
▲	▲	Tractor built with no loader arms for use in confined areas
		Hydraulic System
●		78-L/m (20.5 gpm) rated flow
	●	96-L/m (25.3 gpm) rated flow
●	●	Independent hydraulic reservoir
●	●	Independent hydraulic oil cooler
●	●	"O"-ring face-seal connectors
●	●	6-micron vertical spin-on filter
		Electrical
●		12-volt 90 amp
	●	12-volt 120 amp
●	●	Single battery with 730-min. reserve capacity
▲	▲	Dual batteries with 880-min. reserve capacity
●	●	Positive terminal battery cover
●	●	Blade-type multi-fused circuits
●	●	By-pass start safety cover on starter
		Lights
●	●	Front driving/working (2)
●	●	Combination turn signal/flashing lights (2)
●	●	Rear stop and taillights (2)
●	●	Rear reflectors (2)
▲	▲	Canopy lighting/electrical package: Rear work lights (2), 12-volt outlets (2), and battery-disconnect switch
		Operator's Station
●	●	**Canopy:** 2-post, ROPS/FOPS (Level 1 / meets ISO 3471/SAE J1040), steel roof
▲	▲	**Cab:** ROPS/FOPS (Level 1 / meets ISO 3471, SAE J1040), air conditioning (7.6-kW (26,000 Btu/h) output and CFC-free R-134a refrigerant), headliner, dome light, tinted safety glass, deluxe interior trim, molded floor mats, left cab door, right emergency egress, front windshield wiper, front windshield washer, heater/defroster/pressurizer (11.7 kW [40,000 Btu/h] heater), 12-volt outlets (2), rear working lights (2), and 40-deg. rotating mechanical suspension cloth seat
●	●	Electric monitor system with audible and/or visual warning: Service code / Air cleaner restriction / Low alternator voltage / Engine coolant temperature / Engine oil pressure / Hydraulic filter restriction / Park brake on/off / Seat belt / Transmission oil temperature / Hour meter / Engine rpm / System voltage / Job timer / Machine information
●	●	Engine coolant temperature gauge and fuel gauge

210K EP	210K	Operator's Station *(continued)*
●	●	Left-front access
●	●	Slip-resistant steps and ergonomically located handholds
●	●	Built-in Operator's Manual storage compartment with manual
●	●	Interior rearview mirror
●	●	Foot throttle
▲	▲	Hand throttle
●	●	Horn
●	●	Key-start switch with electric fuel shutoff
●	●	Suspension vinyl seat, 90-deg. rotating with flip-up armrests, backrest angle adjustment, swivel base, and 76-mm (3 in.) retractable seat belt
▲	▲	Non-suspension vinyl seat, 40-deg. rotating with flip-up armrests and 76-mm (3 in.) retractable seat belt
▲	▲	Suspension cloth/fabric seat, 90-deg. rotating with flip-up armrests, backrest angle adjustment, swivel base, and 76-mm (3 in.) retractable seat belt (for use with optional cab)
		Loader Buckets
●	●	Less bucket, with bucket pins
▲	▲	Less bucket, less pins
▲	▲	General-purpose bucket with cutting edge and skid plates
▲	▲	Heavy-duty bucket
▲	▲	Multipurpose bucket with cutting edge and skid plates
▲	▲	Loader coupler
▲	▲	Ride control
		Box Blade
▲	▲	2.13-m (84 in.) heavy-duty with hydraulically actuated ripper bar and replaceable router blades
▲	▲	2.20-m (88 in.) heavy-duty with hydraulically actuated ripper bar and replaceable router blades
		Overall Vehicle
●	●	3-piece unitized construction mainframe
●	●	Vehicle tie-downs (2 front and 2 rear)
●	●	Vandal protection for instrument panel, access doors, fuel tank, and hydraulic reservoir
●	●	Reverse warning alarm
▲	▲	3-point hitch counterweight
▲	▲	Wheel weights
	▲	Hydromechanical PTO, 41 kW (55 hp), 540 rpm
▲	▲	3-point hitch weight box
▲	▲	Drawbar, fixed single position
▲	▲	Machine security
▲	▲	Tilt steering
▲	▲	French language kit
▲	▲	Spanish language kit
●	●	JDLink™ Ultimate wireless communication system (available in specific countries, see your dealer for details)

Investment Proposal for:
CITY OF BRAWLEY
ATTN FIN DEPT
400 MAIN ST
BRAWLEY, CA 92227
Phone: (760) 344-8941

RDO EQUIPMENT CO.

James Garcia
3275 Hwy 86
PO Box 488
Imperial, CA 92251
Phone: (760) 355-4331
Mobile: (760) 427-5953
Fax: (760) 355-1821

Thank you for allowing me the opportunity to quote you this equipment. We appreciate your business. James

Equipment: NEW GENIE GTH1056 TELEHANDLER

Key Features

Serial Number

TBD (0 Approximated Hours)	Equipment Price	$129,062.25
Freight In		$6,690.00
	Estimated Conversion Price:	**$135,752.25**

PROPOSAL SUMMARY

Equipment Total	$135,752.25
Sub Total	$135,752.25
Estimated sales tax to apply	
(CAIM CA IMPERIAL 8%)	$10,860.18
(Tire Fee (TF))	$7.00
Total Investment	**$146,619.43**

INCLUDES THE FOLLOWING OPTION:
48" PALLET FORKS & PIN ON CARRIAGE
PERKINS 124 HP ENGINE, MODEL 1204E, TIER 4i
FULLY ENGLOSED CAB WITH AIR CONDITIONER; DOOR, CLIP-IN GLASS INSERTS, FRONT WIPER, WASHER, CAB HEATER AND DEFROSTER

OPTIONAL: 60" ROTATING CARRIAGE (QUICK-ATTACH, INCLUDES AUXILIARY HYDRUALIC CIRCUIT). $6,042.00 PLUS TAX FROM FACTORY.

California Air Resources Disclosure - When operated in California, any off-road diesel vehicle may be subject to the California Air Resources Board In-Use Off-Road Diesel Vehicle Regulation. It therefore could be subject to retrofit or accelerated turnover requirements to reduce emmission of air pollutants. CA Air Resources Board Regulation 2449(d)(3) As of June 15th, 2008 idling rental equipment must be limited to 5 minutes.

James Garcia
Sales
RDO EQUIPMENT CO. - AG
jgarcia@rdoequipment.com

This proposal was created on March 1, 2013 and is valid until April 1, 2013 and is subject to prior sale. After that date the quote and terms in the proposal may need to be revised.

D529023 C8941003

Genie
A TEREX BRAND

Telehandler
GTH -1056

Specifications

Model	GTH -1056	
Measurements	**US**	**Metric**
Maximum lift height	56 ft 10 in	17.32 m
Maximum forward reach	42 ft	12.80 m
⚠ Height, stowed	8 ft 6 in	2.59 m
⚠ Length, stowed (without forks)	21 ft	6.40 m
Width	8 ft 6 in	2.59 m
⚠ Wheelbase	10 ft 8 in	3.25 m
⚠ Ground clearance, center	1 ft 10 in	0.56 m
⚠ Ground clearance, axle	1 ft 6 in	0.46 m
Fork cross section	2.25 x 4 in	57 x 101 mm
Productivity		
Maximum lift capacity	10,000 lbs	4,536 kg
Lift capacity at maximum height	4,000 lbs	1,814 kg
Lift capacity at maximum reach	3,000 lbs	1,361 kg
Raise/Lower boom	13/12 sec	
Extend/Retract	16/15 sec	
Frame leveling	10° side to side	
Drive speed	17 mph	27 km/h
Draw bar pull	28,800 lbs	13,063 kg
Turning radius, outside (4WS)	13 ft 3 in	4.04 m
Auxiliary hydraulic flow	2-15 gpm	8-57 lpm
Auxiliary hydraulic pressure	3,200 psi	220 bar
Tires, standard size	14 x 24 in, 12 ply	
Power		
Power source	Perkins 1204E T4i 124 HP (92.47 kW)	
	Deutz TCD 3.6 L T4i 121 HP (90.23 kW)	
Electrical system	System voltage 12 volt	
	Alternator 95 amp	
	Battery 1000 CCA at 0 F (-18°C)	
Hydraulic tank capacity	44 gal	167 L
Hydraulic system capacity (w/tank)	55 gal	208 L
Fuel tank capacity	35 gal	132 L
Weight*		
	30,000 lbs	13,608 kg
Standards Compliance	ANSI/ITSDF B56.6, CSA B335	

Load Chart GTH -1056**

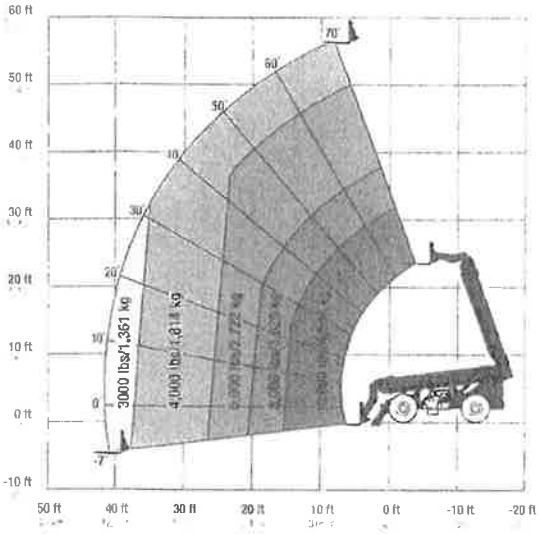

With stabilizers down

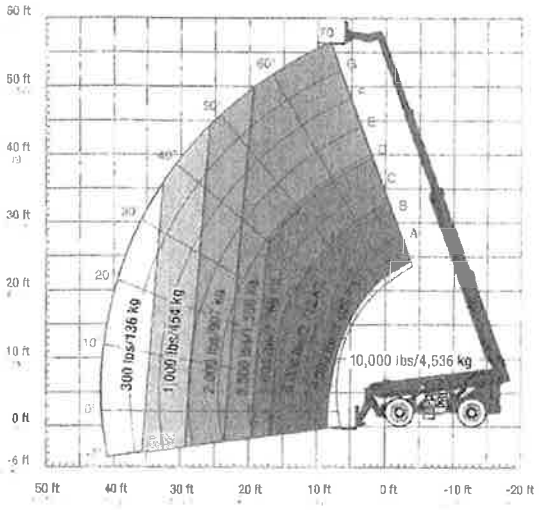

With stabilizers up

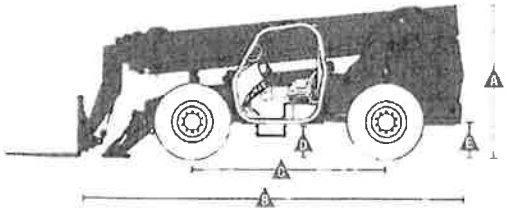

www.genielift.com

Genie
A TEREX BRAND

Telehandler
GTH -1056

Features

Standard Features

Measurements

- 10,000 lb (4,536 kg) maximum lift capacity
- 56 ft 10 in (17.32 m) maximum lift height
- 42 ft (12.80 m) maximum reach

Productivity

- Full time planetary 1-wheel drive
- AWS
- Operator selectable front, crab, coordinated steering modes
- Frame leveling 10° side to side
- 3-speed forward and reverse powershift transmission
- Power assisted steering
- Inboard wet disc service brakes
- Wet disc spring applied parking brake
- 14 x 24 in 12-ply, air filled, all terrain tires
- Front axle differential lock
- Rear axle stabilization system
- Twin axle mounted stabilizers
- High efficiency variable displacement hydraulic pump
- ROPS/FOPS canopy (ISO compliant)
- Single multi-function, proportional joystick
- Machine level indicator
- Full instrumentation
- 18 in carriage and pallet forks
- Boom angle indicator
- Retractable 3 in (8 cm) seatbelt
- Left front and rear tire fenders
- Reverse motion alarm

Options & Accessories

Productivity

- Fully enclosed cab (includes full glass, defroster, wiper, washer, right-side sliding window, split door)
- Air conditioning
- Glass over skylight bars
- Front window
- Right-side screen
- Adjustable suspension seat
- Dual joystick controls
- Flashing beacon
- Work lights (2 cab mounted front, 1 back-up, 1 stop/tail, illuminated dash gauges)
- Road lights (2 cab mounted front, 1 back-up, 2 rear stop/turn/tail, 2 front turn, illuminated dash gauges)
- Auxiliary hydraulic circuit
- Fenders (full set)
- Mounted disposable fire extinguisher

Engine Options

- Perkins 1204E TIII 12 LHP (92.47 kW)
- Deutz TCD 3.6 L T4i 121 HP (90.23 kW)
- Arctic Package for Perkins

Tire Options

- 14 x 24 in 12-ply foam-filled all terrain tires

Options & Accessories

Attachment Options

- Carriages- Quick Attach
  - 43 in (1.22 m) rotating carriage (10° from center left and right)
  - 60 in (1.52 m) rotating carriage (10° from center left and right)
  - 60 in (1.52 m) wide fork carriage
  - 72 in (1.83 m) wide fork carriage
- Forks (in addition to standard 18 in pallet forks)
  - 60 in (1.52 m) pallet forks (set of two) 2.25 x 4 x 60 in (.06 x .10 x 1.52 m)
  - 72 in (1.83 m) pallet forks (set of two) 2.25 x 4 x 72 in (.06 x .10 x 1.83 m)

Genie United States

[illegible]

Genie Europe

[illegible]

Distributed By:

[illegible]

www.genielift.com

RESOLUTION NO. 2013-

RESOLUTION OF THE CITY COUNCIL OF THE CITY OF BRAWLEY, CALIFORNIA APPROVING THE EXPANSION OF THE IMPERIAL VALLEY ENTERPRISE ZONE BOUNDARIES.

WHEREAS, the City of Brawley of Imperial County currently has an enterprise zone that was established on March 1, 2006 and has jurisdiction over the existing zone; and

WHEREAS, the City of Brawley wishes to expand the boundaries of its enterprise zone to include the geographic area set forth in the attached boundary map; and

WHEREAS, land included with the proposed expansion area is zoned for industrial or commercial use; and

WHEREAS, basic infrastructure is available to the area that would be included in the proposed expansion area; and

WHEREAS, the City of Brawley of Imperial County will submit a written request as required to the California Department of Housing and Community Development to have its enterprise zone boundaries expanded.

Oberon Fuels	037-070-013-000	7.12 Acres

NOW THEREFORE, BE IT RESOLVED that the Brawley City Council of the City of Brawley does hereby support and approve the Imperial Valley Enterprise Zone expansion into the areas of the County of Imperial as shown on the attached map.

APPROVED, PASSED AND ADOPTED at a regular meeting of the City Council of the City of Brawley held on the 2nd day of April, 2013.

CITY OF BRAWLEY, CALIFORNIA

_____
Sam A. Couchman, Mayor

ATTEST:

_____
Janet P. Smith, Deputy City Clerk

STATE OF CALIFORNIA
COUNTY OF IMPERIAL
CITY OF BRAWLEY

I, ***JANET P. SMITH***, Deputy City Clerk of the City of Brawley, California, ***DO HEREBY CERTIFY*** that the foregoing Resolution No. 2013- was passed and adopted by the City Council of the City of Brawley, California, at a regular meeting held on the 2nd day of April, 2013, and that it was so adopted by the following roll call vote: m/s/c

AYES:
NAYES:
ABSTAIN:
ABSENT:

Dated: _____

Janet P. Smith, *Deputy* City Clerk

imperial valley ENTERPRISE ZONE

Tuesday, April 02, 2013

To: Brawley City Council

From: Daniel Fitzgerald, IVEZ Manager/Director

Re: Imperial Valley Enterprise Zone Expansion (Oberon Fuels)

The IVEZ JPA on March 21 approved a request from Oberon Fuels to expand the territory of the Imperial Valley Enterprise Zone to include their proposed site location north of Brawley. Oberon Fuels is headquartered in San Diego and is constructing a fuel processing facility at the corner of Kershaw and Rutherford north of Brawley. The site has been secured by the company through a long-term lease with an option for purchase. The property owner is aware and supportive of the expansion request.

Per the California Administrative Code title 25, section 8446.1.b.1 (article 10) regarding expansion of Enterprise Zones, a resolution from each governing body wherein the EZ is located is required approving the expansion, which would be the Imperial County Board of Supervisors and the Brawley City Council. For that reason, this matter is presented to the Board of Supervisors.

Site Expansion (APN 037-070-013) 7.12 acres: Oberon Fuels has been in the process of removing the prior structure on the site to develop their fuel processing station, specifically producing DME. The site is critical for the company's production, having a direct natural gas pipeline on the site. The site also is ideal being able to incorporate additional waste from the feed lot adjacent to the property for fuel production.

Oberon Fuels will hire 10 to 12 full time employees at the site and will invest $14.5 million locally. The expansion meets all the requirements and fits within the IVEZ strategy per the MOU with the state. This will be a significant investment ($14.5 million) in Imperial County and will produce 10-12 new full-time jobs.

This will be a non-contiguous expansion. While there are parcels zoned industrial near the proposed expansion, they are currently non-developed or the use has turned to only related to cultivation, which would not qualify for expansion.

The IVEZ has 1098.88 acres still available for expansion.

860 Main St. Brawley CA 92227
(760) 351-7155 www.ivez.com

Assessor Inquiry - Main
Asmt: 037-070-013-000 Feeparcel: 037-070-013-000
Owner: HENRIETTA FARMS INC

Situs Address		5451 KERSHAW RD Brawley 92227		
NameAddress		HENRIETTA FARMS INC PO BOX 239 BRAWLEY CA 92227		
Status	Date	ACTIVE		
Taxability Code	Descr	000	NORMAL OWNERSHIP	
TRA	Base Date	056-000		
Creating Doc#	Date	1900I9999999		
Current Doc#	Date	200120951253	12/19/2001	
Terminating Doc#	Date			
Neighborhood C...	Supl Cnt	037		1
Asmt Description		E120FT OF R/R RIGHT OF WAY IN TR157 7.12AC		
Land Use 1	Land Use 2	AXXX	X	
Zoning 1	Dwell 1			
Acres	SqFt	7.12		0
SSN1	SSN2	- -	- -	

Parcel Desc: E120FT OF R/R RIGHT OF WAY IN TR157 7.12AC

Section	TownShip	Range	
Description		E120FT OF R/R RIGHT OF WAY IN TR157 7.12AC	
TPZ	Ag Pres	Etal	Bonds
Multi ...	910 MH	Flag 1	Flag 2
Asmt PP	Tax PP	Appeal	Split
Comments		From 0370701301 07/25/2005	

Values

	TAXROLL	CURRENT	APR DATE
Land	13,169	13,169	
Structure			
Fixtures			
Growing			
Total L&I	13,169	13,169	
Fixture RP			
MH PP			
PP			
Exemption			
Net	13,169	13,169	
R/C #			
TR/Date			
Status			
Description	ENROLLED is BASE YEAR		

Main | Has Notes | Ownership Detail | Ownership History | Exemptions | Mfg Homes | Attributes | Value History | Situs | Sales

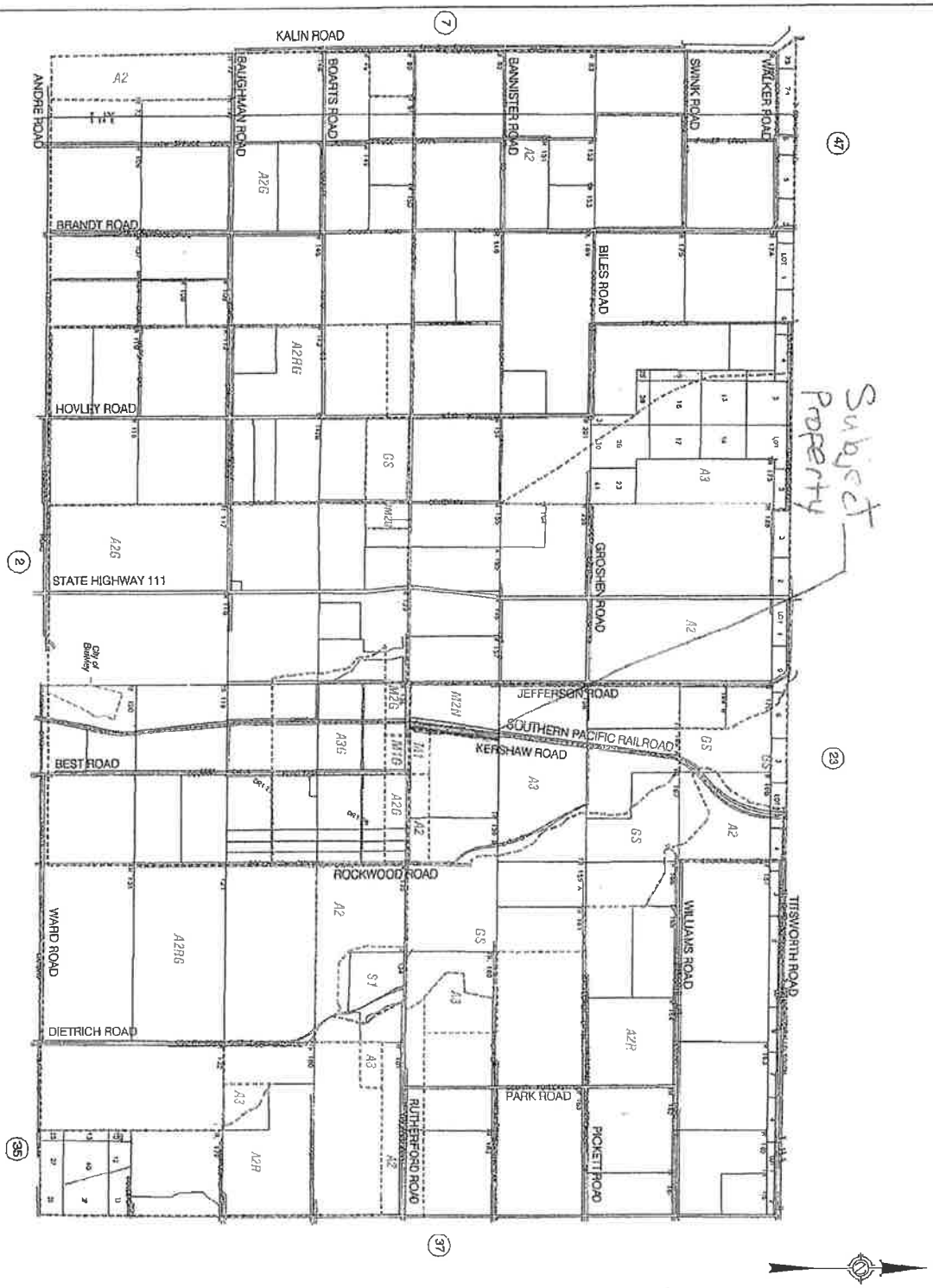

NOTE: Efforts have been made to insure zoning accuracy; however, this map may be revised at any time. Therefore this map is generally accurate, for zoning information only! Neither the County of Imperial nor the Planning/Building Department are responsible for erroneous information or improper use of this map.
Adopted by M. O. # 15 (g) on Mar. 4, 1998 effective July 1, 1998.

Director _____

ROCKWOOD AREA

Title 9 Division 25 Section 92523.00

MAP 23

Revision Dates:	

Imperial County Planning/Building Department

SITE LOCATION
5451 KEYHAN RD.

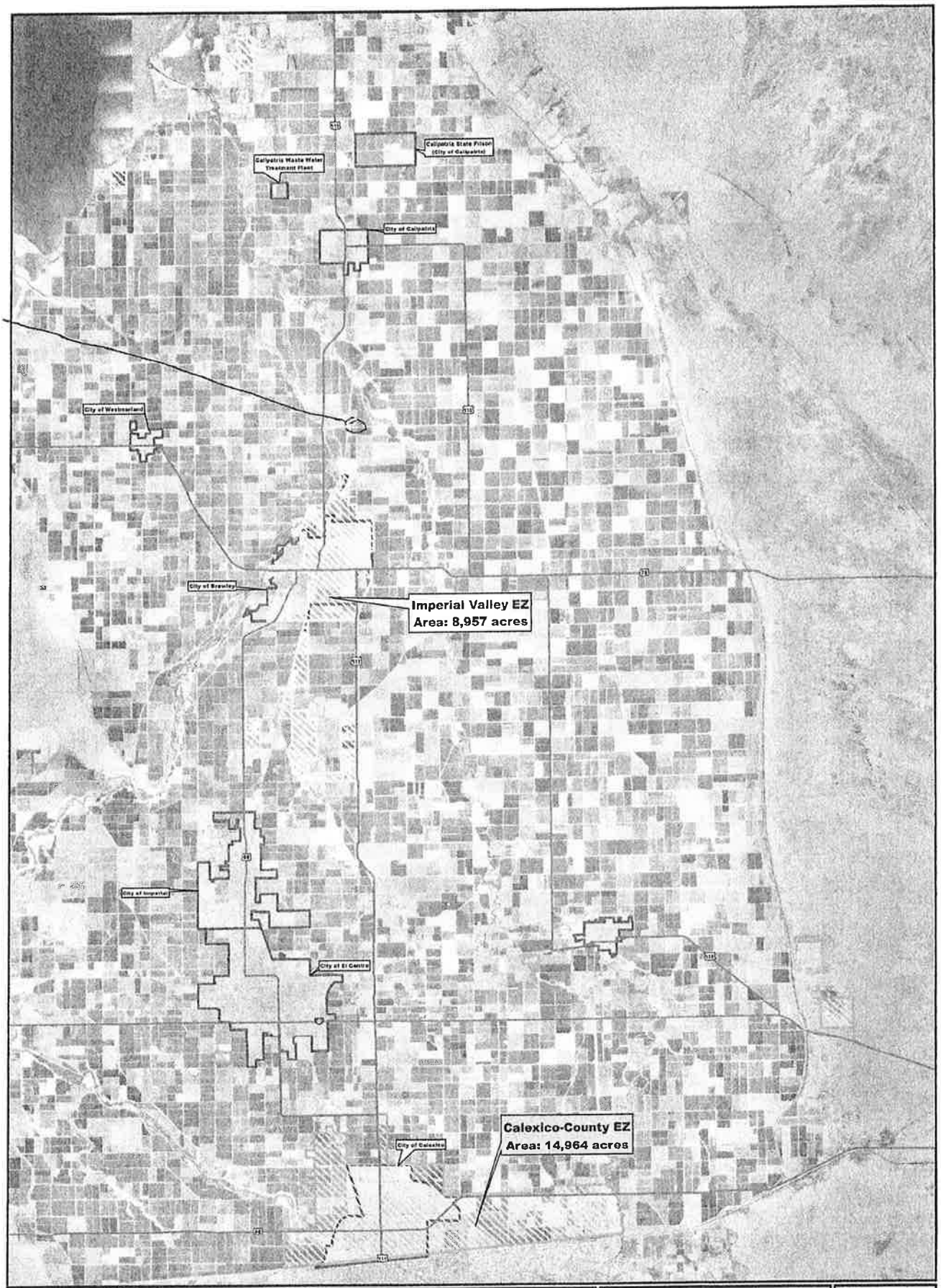

IMPERIAL COUNTY, CALIFORNIA ENTERPRISE ZONES

UPDATED: February 06, 2013

Highways
Cities
Imperial Valley Enterprise Zone
Calexico-County Enterprise Zone

N
W E
S

COUNCIL AGENDA REPORT
City of Brawley

Meeting Date: April 2, 2013
City Manager:

PREPARED BY: Richard Rubio, Interim Parks & Recreation Director

SUBJECT: Brawley Community Foundation's First Annual "Taking Back Main Street" Event on April 27, 2013.

CITY MANAGER RECOMMENDATION: Approve the Brawley Community Foundation's request to sell and consume alcohol on a City street on Saturday, April 27, 2013.

DISCUSSION: The Brawley Community Foundation (BCF) is hosting the first "Taking Back Main Street" event on April 27th 201. The Foundation's plan is to provide a host of activities along Main Street. Planned activities include an arts & craft show, a car show, live music, a farmer's market, Library book sale and a "Lucha Libre" exhibition. This will be the first major fundraiser for the Foundation.

City Council approval is required to permit the Brawley Community Foundation to sell alcohol on public property. The BCF will be working with the Fire Department, Police Department, Public Works Department, Risk Management and Parks & Recreation staff to ensure that all requirements of the City's "Guidelines for Use of Public Facilities" are met.

Fiscal Year 2012-2013

Monthly Staffing Report for April 2013

Updated 3/28/2013

Full-time Regular EE Groups	Authorized Positions	Filled Positions	Vacant Positions	Notes
Building & Community Develop.	5	5	0	
Finance	7	7	0	
Fire	14	14	0	Formula error on personnel summary reflects a count of 13
Personnel & Risk Management	1	1	0	
Information Technology	1	1	0	
Library	4	4	0	
Parks & Recreation	11	9	2	Parks Supv position frozen; Parks Maintenance Worker
Planning	2	2	0	
Police	49	46	3	3 Officer vacancies,eligibility list, one candidate given conditional offer
Public Works	41	39	2	Sweeper Operator & Equip Mechanic (see temporary positions)
Records Management/City Clerk	3	3	0	Clerk as 2 positions
Council Members	5	5	0	
Treasurer	1	1	0	
City Manager	1	1	0	
Total	145	138	7	

Groups	Limited Term Positions	Temp Positions	Temp Agency Positions	
City Manager	0	0	0	
Finance	0	1	0	Accounting Assistant
Fire - Reserve	0	16	0	Budgeted for 25. Recruitment is progressing. Eligibility list created. Consenus needed for hiring nine reserve firefighters
Library	3	0	0	LAMBS
Parks & Recreation	0	7	0	3 F/T Parks Maintenance Workers, 3 seasonal, 1 P/T Sr. Center Coordinator
Police	0	2	1	Car Washer, P/T Dispatcher, Graffiti Abatement
Public Works	0	2	0	Equip Mechanic Assistant, Sweeper Operator, finalizing WWTP OIT hire
Records Management	0	3	0	Janitor, Admin Clerk , Deputy City Clerk - all P/T positions

Prepared by: Shirley Bonillas, Personnel & Risk Management Administrator